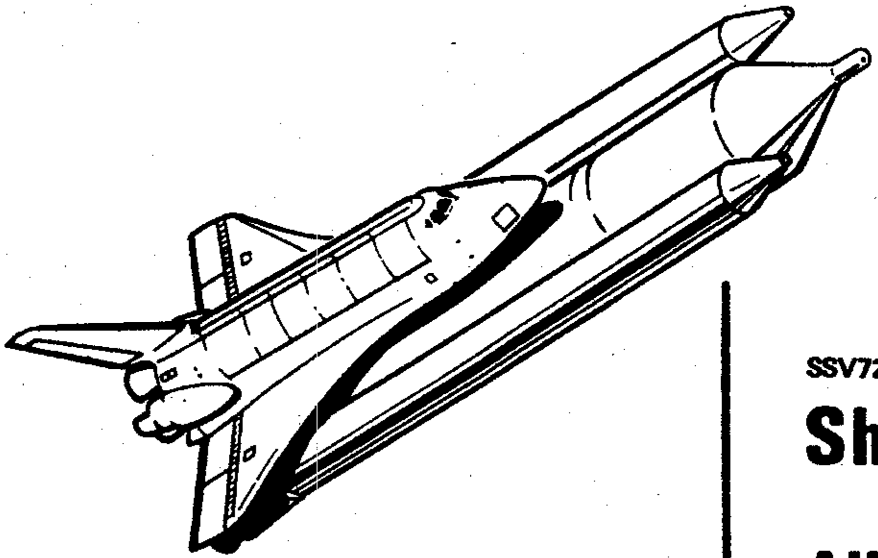

SSV72-6

Shuttle System Orbiter

AUTOMATIC RETURN/ SURVIVABILITY STUDY

6 NOVEMBER 1972

SHUTTLE SYSTEM ORBITER

AUTOMATIC RETURN/SURVIVABILITY STUDY

NAS9-14000, EXHIBIT C

STUDY OBJECTIVES

- DEFINE SYSTEM WEIGHT & PROGRAM COST DELTAS FOR INCORPORATING
  - HARDENED AVIONICS
  - AUTO-RETURN
  - CREW RADIATION PROTECTION
- PROVIDE DATA TO NASA/USAF FOR PRR DECISION
- DEFINE PLAN TO IMPLEMENT SURVIVABILITY/AUTO-RETURN PER PRR DECISION

STUDY GROUND RULES

- AVIONICS BASELINE
  - PRR B/L
  - COMM STUDY Δ'S INCLUDED
- NUCLEAR ENVIRONMENT
  - STS SURVIVABILITY CRITERIA (MARCH 1972)
  - EXO-ATMOSPHERIC BLAST ANYTIME BETWEEN MPS BURNOUT & LANDING
- AVIONICS HARDENING
  - HARDEN ALL B/L EQUIPMENT - CONTINUE/COMPLETE MISSION AFTER EVENT
  - HARDEN EQUIP. ADDED TO B/L FOR AUTO-RETURN
  - ASSESS Δ FOR B/L WITH FULL LIGHTNING PROTECTION
- AUTO-RETURN
  - ADD EQUIP. FOR ORBITER SAFE RETURN THRU ROLLOUT
    CREW PERFORMANCE DEGRADED
    CREW INCAPACITATED
  - RETURN TO KSC OR VAFB SITES ONLY
  - ASSESS Δ WITH OR WITHOUT UNMANNED 1ST FLIGHT CAPABILITY IN B/L
- CREW PROTECTION
  - LIMIT CREW DOSE TO 200, 450 & 800 RAD LEVELS
  - DEFINE BOTH PERMANENT & KIT SHIELDING CONCEPTS
- PROGRAMMATIC
  - ALL VEHICLES (NASA/USAF) IDENTICAL
  - RESIZE FOR SURVIV Δ'S TO MAINTAIN B/L VEHICLE PERFORMANCE CAPABILITY
  - CONSIDER CONCURRENT & PHASED SURVIV IMPLEMENTATION

COST GROUND RULES

- COSTS INCLUDE:
  - BASIC EQUIPMENT CHANGES, RAD SHIELDING, INSTAL, ETC.
  - CHANGES TO ELECTRICAL POWER, THERMAL CONTROL DUE TO BASIC EQUIP CHANGES
  - VEHICLE RESIZING
- REAL YEAR DOLLARS
- COSTS ARE NR COSTS THROUGH G&A, SHORT OF FEE

STUDY APPROACH

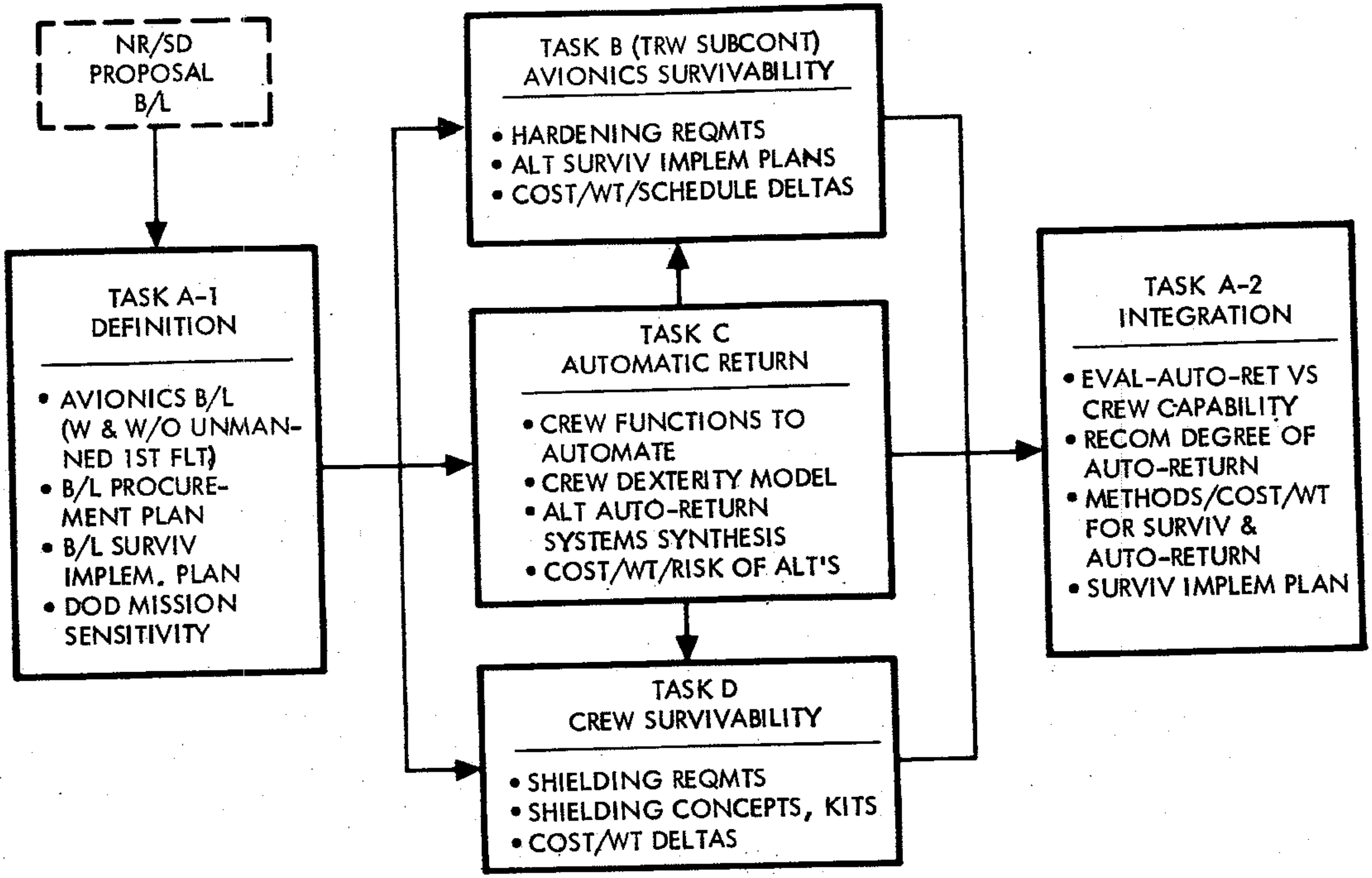

POST EXPOSURE CREW PERFORMANCE

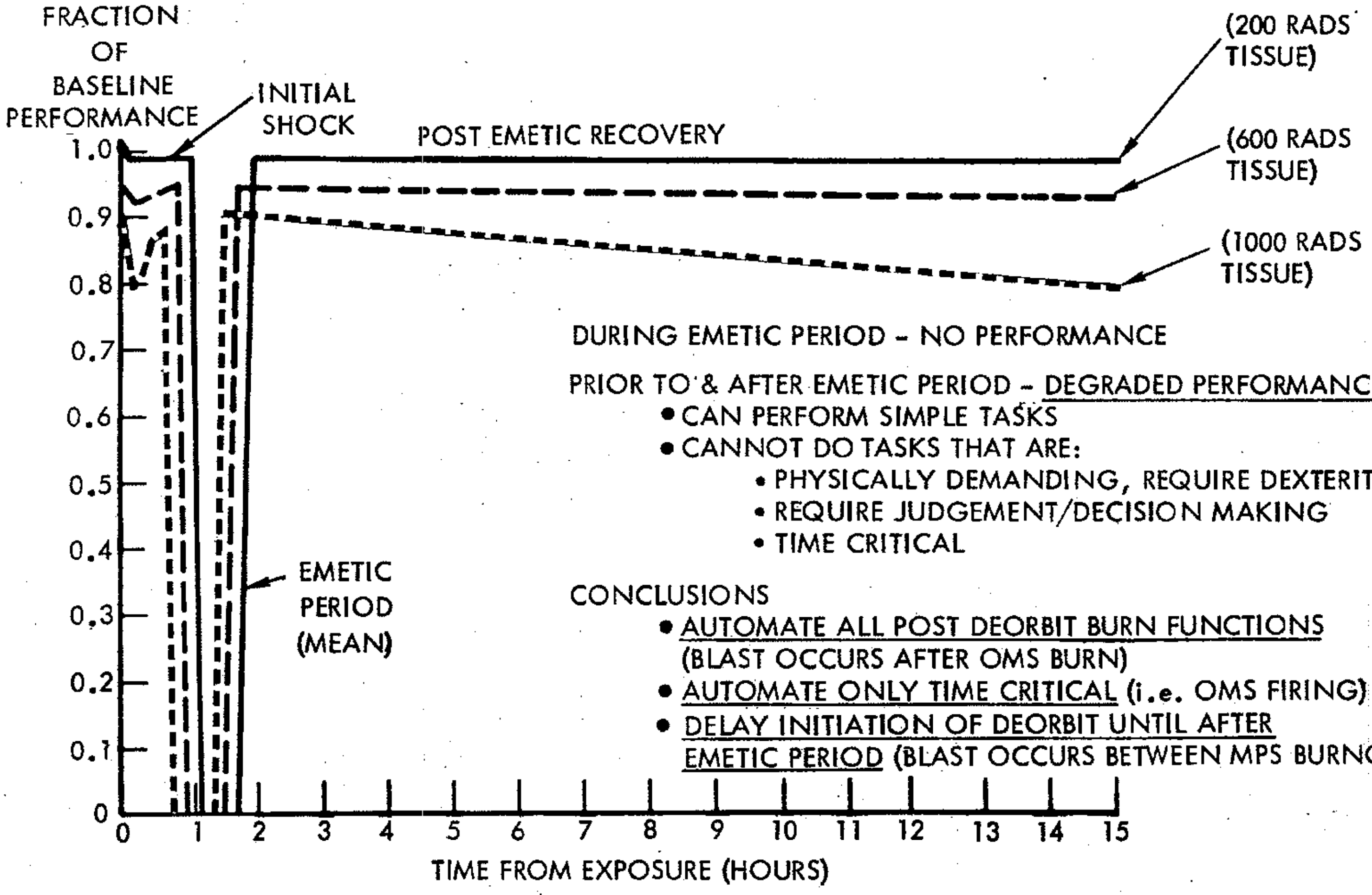

DURING EMETIC PERIOD - NO PERFORMANCE

PRIOR TO & AFTER EMETIC PERIOD - <u>DEGRADED PERFORMANCE</u>

- CAN PERFORM SIMPLE TASKS
- CANNOT DO TASKS THAT ARE:
  - PHYSICALLY DEMANDING, REQUIRE DEXTERITY
  - REQUIRE JUDGEMENT/DECISION MAKING
  - TIME CRITICAL

CONCLUSIONS

- <u>AUTOMATE ALL POST DEORBIT BURN FUNCTIONS</u> (BLAST OCCURS AFTER OMS BURN)
- <u>AUTOMATE ONLY TIME CRITICAL</u> (i.e. OMS FIRING) <u>ON-ORBIT TASKS</u>
- <u>DELAY INITIATION OF DEORBIT UNTIL AFTER EMETIC PERIOD</u> (BLAST OCCURS BETWEEN MPS BURNOUT & DEORBIT)

AUTOMATION REQUIRED FOR PARTIALLY INCAPACITATED CREW

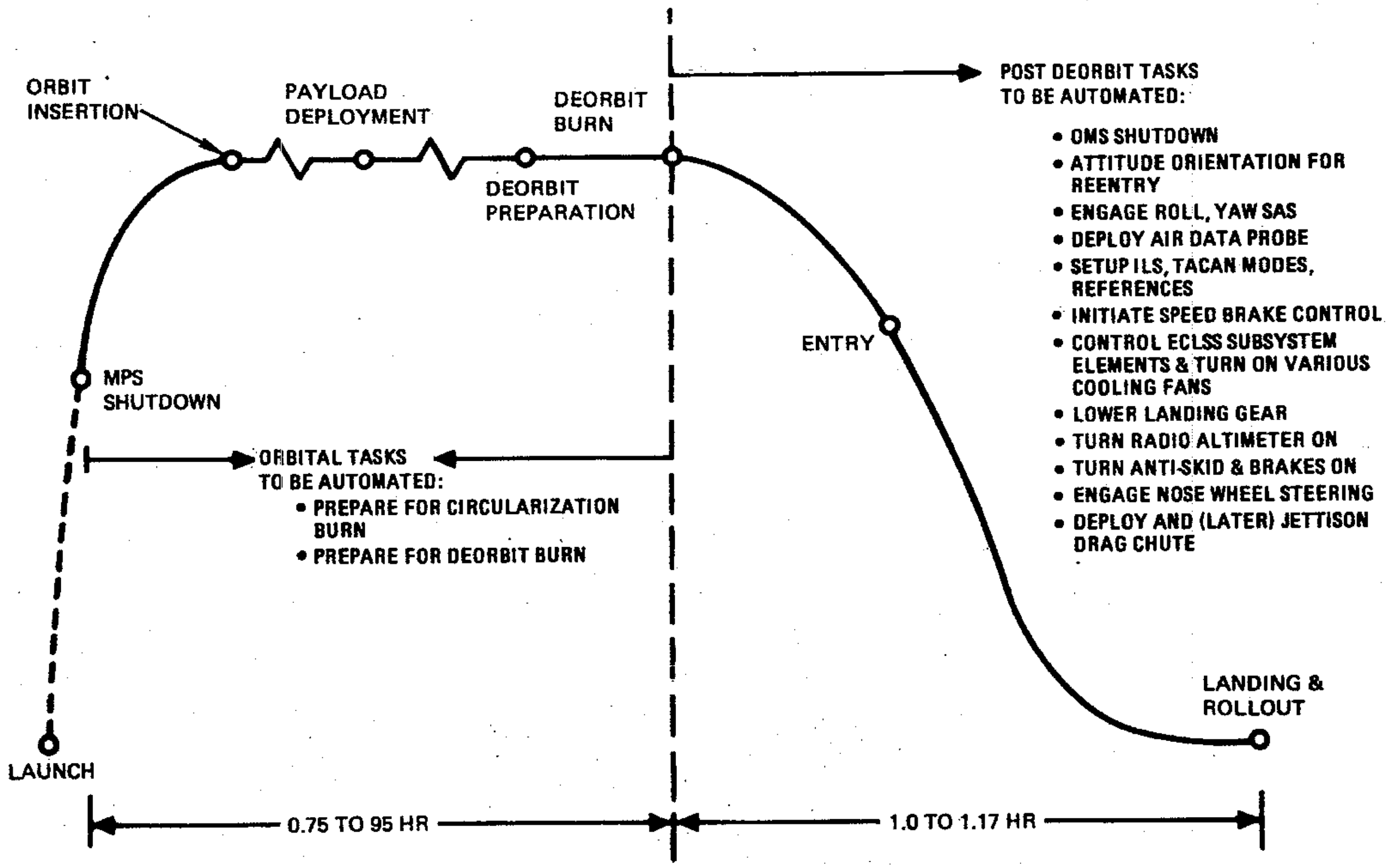

- CREW CANNOT BE RELIED UPON FOR TIME RESTRICTIVE ORBITAL OR POST DEORBIT (ALL) TASKS.
- IF POSSIBLE, DEORBIT SHOULD BE DELAYED UNTIL AFTER EMETIC PERIOD.

ALTERNATE AUTO-RETURN SYSTEMS

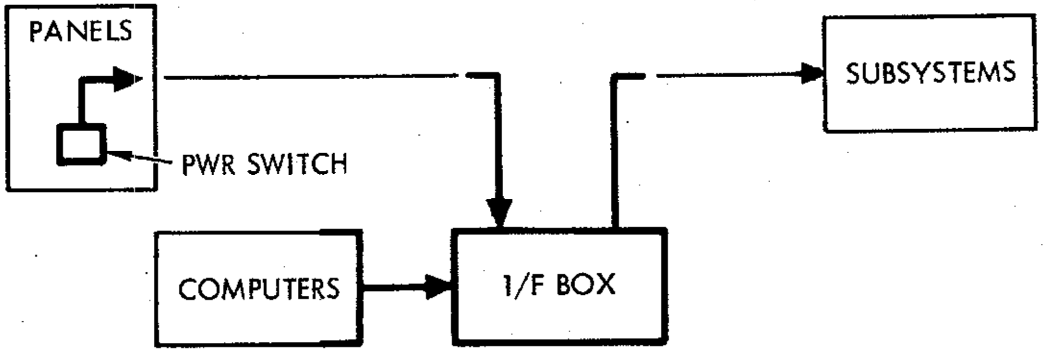

	CASE NO. 1	CASE NO. 2	CASE NO. 3
• CREW FUNCTIONS AUTOMATED	• ALL RECOVERY SEQUENCING, ALL REDUNDANCY MGMT	• TIME-CRITICAL RECOVERY SEQUENCING, NO REDUNDANCY MGMT	• TIME-CRITICAL RECOVERY SEQUENCING, ALL REDUNDANCY MGMT
• SYS ADDITIONS (NO UFF IN BASELINE)	• I/F BOXES (6) FOR 1053 CONTROL WIRES • HYDRAULIC GEAR LATCH • ACCESS WIRING • 9700 WORDS SOFTWARE	• I/F BOXES (6) FOR 122 CONTROL WIRES • ACCESS WIRING • 425 WORDS SOFTWARE	• I/F BOXES (6) FOR 477 CONTROL WIRES • HYDRAULIC GEAR LATCH • ACCESS WIRING • 8225 WORDS SOFTWARE
• SYS ADDITIONS (UFF IN BASELINE)	• CONTROL SWITCHING EQUIP. • 161 CONTROL WIRE INTERFACES • 875 WORDS SOFTWARE	• CONTROL SWITCHING EQUIPMENT	

WEIGHT & COST SUMMARY - AUTO RETURN

IMPACTS	CASE 1: FULL AUTO SEQUENCING, FULL AUTO REDUND MGMT		CASE 2: PARTIAL AUTO SEQUENCING, NO AUTO REDUND MGMT		CASE 3: PARTIAL AUTO SEQUENCING, FULL AUTO REDUND MGMT
	WITHOUT UFF	WITH UFF	WITHOUT UFF*	WITH UFF	WITHOUT UFF
WEIGHT DELTAS					
AVIONICS WEIGHT	308	308	60	60	146
HYDRAULICS & ECLSS	79	79	6	6	57
ORBITER DRY WEIGHT	387	387	66	66	203
ORBITER DRY WEIGHT	552	552	94	94	290
ORBITER GROSS WEIGHT	613	613	105	105	322
SRB GROSS WEIGHT	17,446	17,446	2,975	2,975	9,151
COST DELTAS					
DDT&E					
INCREMENT 1	2.0	1.0	0.4	0.2	1.2
INCREMENT 2	8.4	4.2	1.4	0.7	5.1
PRODUCTION	2.1	2.1	0.5	0.5	1.1
OPERATIONS	16.5	16.5	2.7	2.7	9.0
TOTAL	29.0	23.8	5.0	4.1	16.4

*SAME IMPACT AS "SINGLE STRING" CASE

CREW MODULE RADIATION PROTECTION

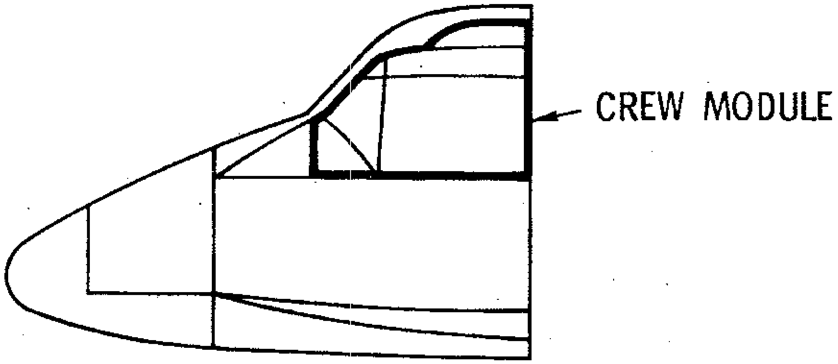

RAD LEVEL	Δ WEIGHT
800	688
450	1314
200	9946

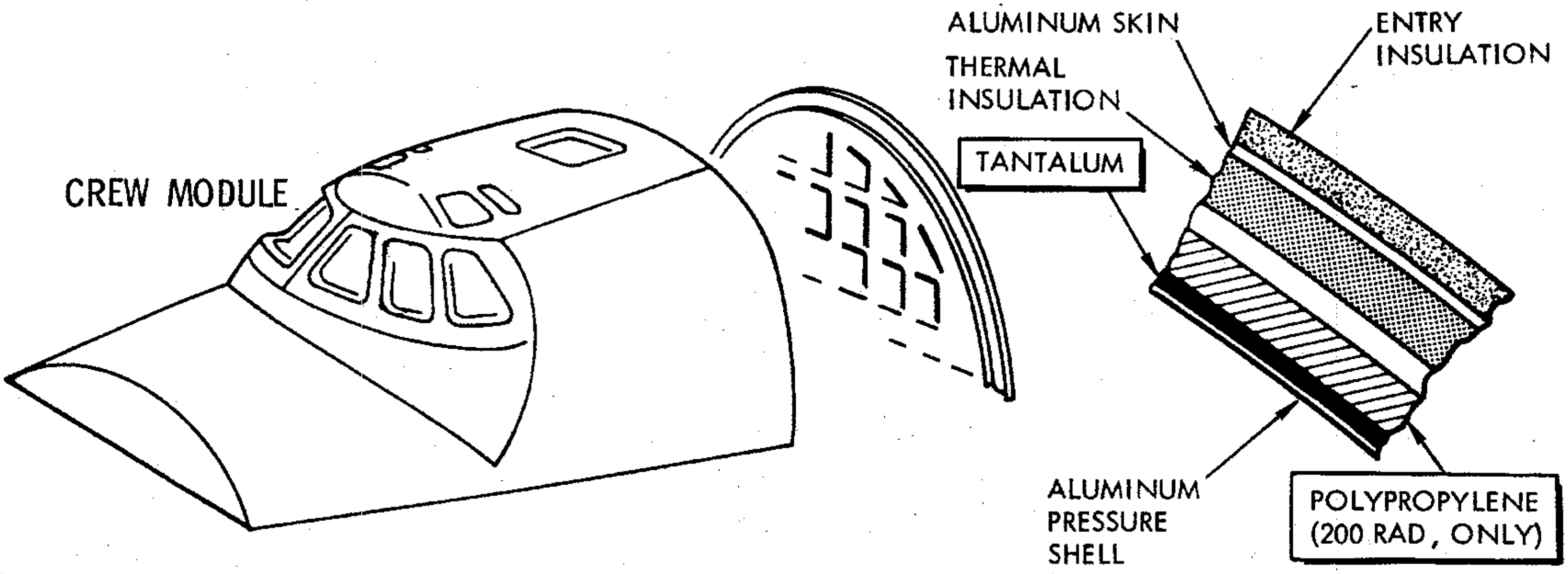

RADIATION PROTECTION SEAT

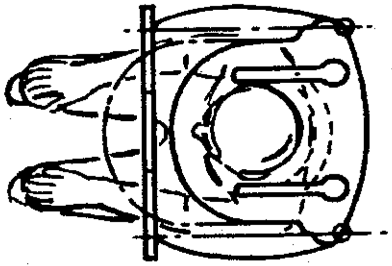

RAD	ΔWEIGHT (LB/SEAT)
800	17.5
450	35.5

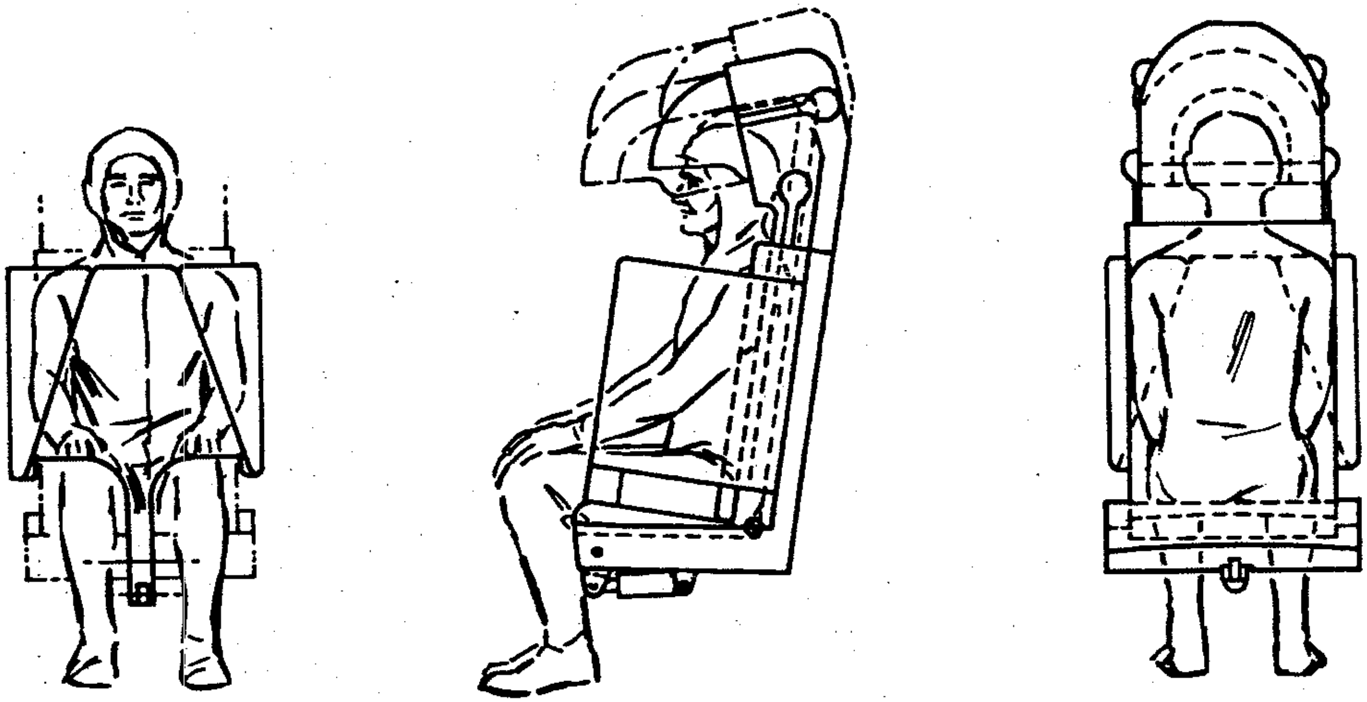

RADIATION PROTECTION SEAT

PROTECTION LEVEL: 200 RAD (TISSUE)

MATERIALS:	TANTALUM	62 LB
	WATER	185 LB
	STRUCTURE	139 LB
TOTAL (PER SEAT)		386 LB

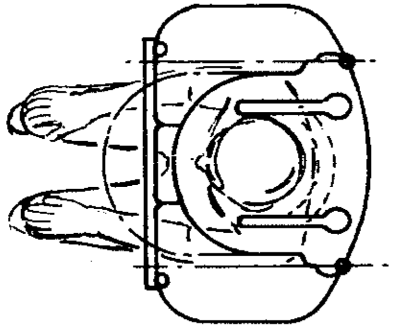

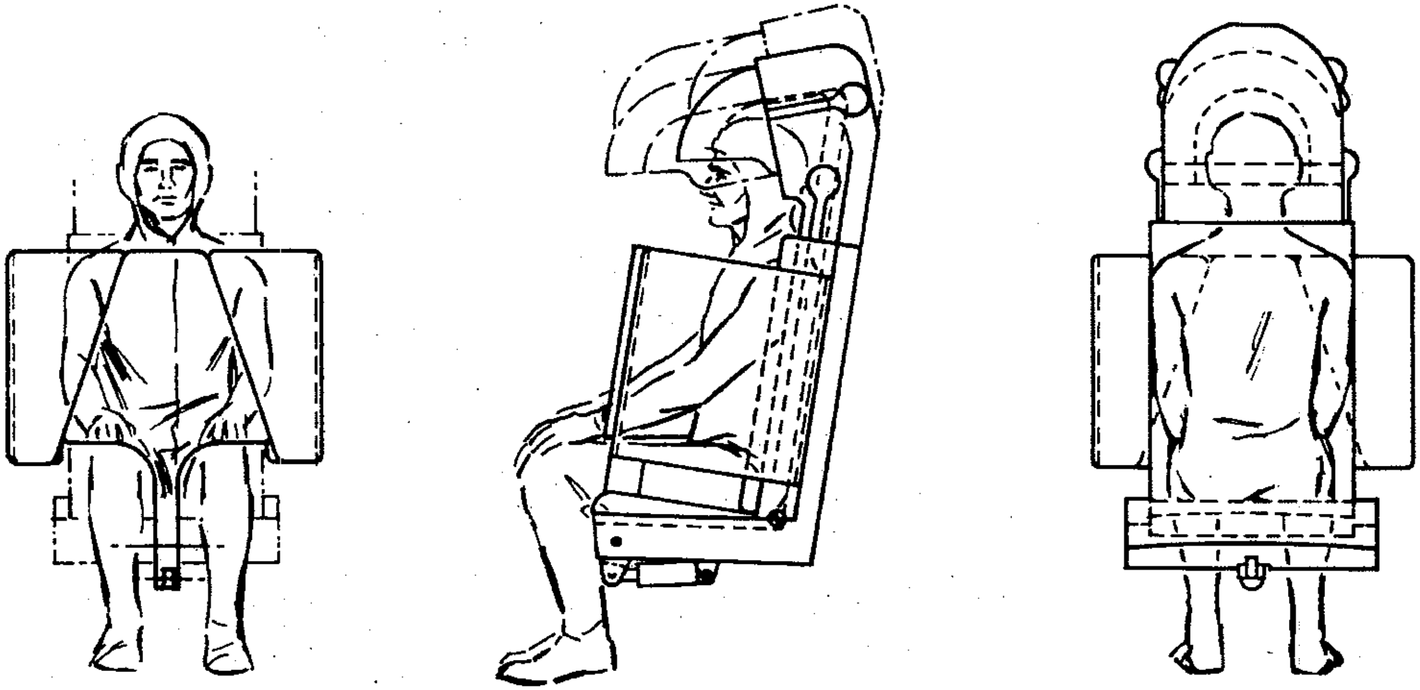

RADIATION PROTECTION MAIL SUIT

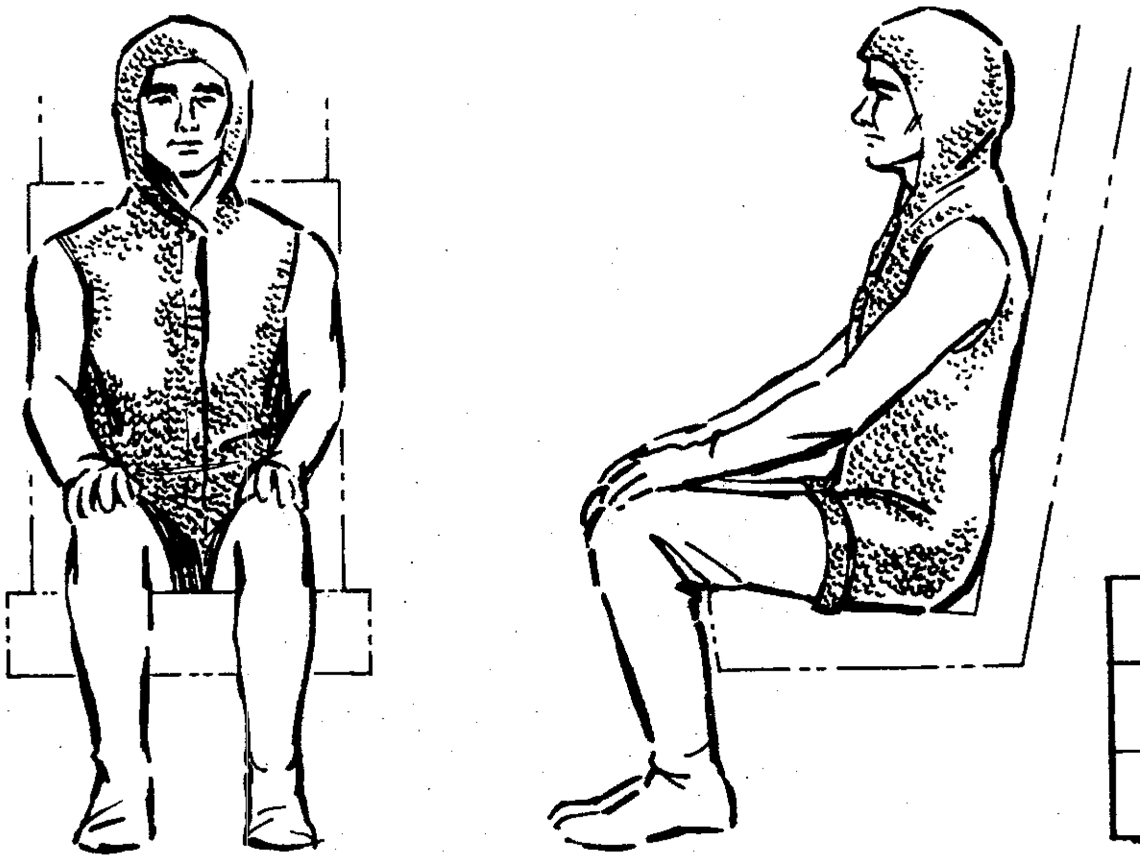

RADS	Δ WEIGHT PER MAN
800	17 LB
450	29 LB

CREW PROTECTION WEIGHT SUMMARY (LB)

	CABIN SHIELDING			SEAT SHIELDING			
				4 MEN			3 MEN *
	800 RAD	450 RAD	200 RAD	800 RAD	450 RAD	200 RAD	450 RAD
SHIELDING & INSTAL WT	688	1,314	9,946	70	142	1,550	107
ORBITER DRY WT Δ	982	1,875	14,202	100	203	2,212	15
ORBITER GROSS WT Δ	1,090	2,083	15,770	113	229	2,458	-218
SRB WT Δ	31,021	59,282	448,814	3,216	6,517	69,955	0

|← ORBITER & SRB RESIZED →|

* WT OF 1 CREW MAN + SEAT (300 LB) REMOVED

CREW PROTECTION COST INCREMENTS ($$\overline{M}$$)

TYPE	RADIATION LEVEL TO CREW (RADS)	DDT&E		PROD	OPS	TOTAL
		INCR 1	INCR 2			
CABIN	800	0.518	2.131	1.156	22.018	25.823
	450	0.878	3.609	1.408	41.935	47.830
	200	5.601	23.018	2.300	312.740	343.659
SEAT (4 MEN)	800	0.065	0.267	0.156	2.007	2.495
	450	0.102	0.419	0.208	4.015	4.744
	200	1.160	4.768	2.704	48.239	56.871
SEAT (3 MEN)	450 *	0.033	0.134	0.156	0.050	0.373

* NO RESIZING REQD.

AVIONICS HARDENING OPTIONS

OPTION NO. 1 - HARDEN B/L AVIONICS SAFE-RETURN EQUIP. ONLY FOR PROMPT DOSE

HARDEN ALL EQUIP. FOR ENHANCED ELECTRONS

(i.e., PROVIDES SAFE RETURN PLUS ABILITY TO LAUNCH AFTER NUCLEAR EVENT)

2 - HARDEN ALL B/L AVIONICS FOR BOTH PROMPT DOSE & ENHANCED ELECTRONS

(i.e., ABILITY TO CONTINUE THE MISSION)

3 - SAME AS OPTION NO. 1 EXCEPT B/L AVIONICS HAVE FULL LIGHTNING PROTECTION

4 - HARDEN ONLY SINGLE-STRING SAFE-RETURN EQUIP. FOR PROMPT DOSE

(i.e., LOWER COST OPTION)

1 (CASE 2) CURRENT "PRR" BASELINE

- COMPUTER CONFIGURATION
    - 2 GN&C
    - 2 AUXILIARY
    - 1 BACKUP G&N
- INCLUDES ELECTRONICS IN ALL SUBSYSTEMS
- COMMUNICATIONS SYS CONFIGURATION INCLUDES FULL CAPABILITY DESCRIBED IN "COMM REQMTS IMPACT STUDY," 12 OCTOBER 1972
- FOUR MAN CREW ON TOP DECK

2 (CASE 1) SAFE RETURN CAPABILITY

- INCLUDES SAFE-RETURN CAPABILITY, FULL REDUNDANCY
- HARDEN ALL AVIONICS FOR ELECTRON RADIATION

3 (CASE 4) SINGLE-STRING SAFE RETURN

- UTILIZES HARDENED BACKUP G&N COMPUTER

EMP HARDENING

REQUIREMENT: WITHSTAND EMP WITHOUT DAMAGE & WITHOUT SPECIAL CREW ACTIONS

EVALUATE
- ANTENNAS
- LIGHTS
- TRANSDUCERS
- ACTUATORS
- VALVES

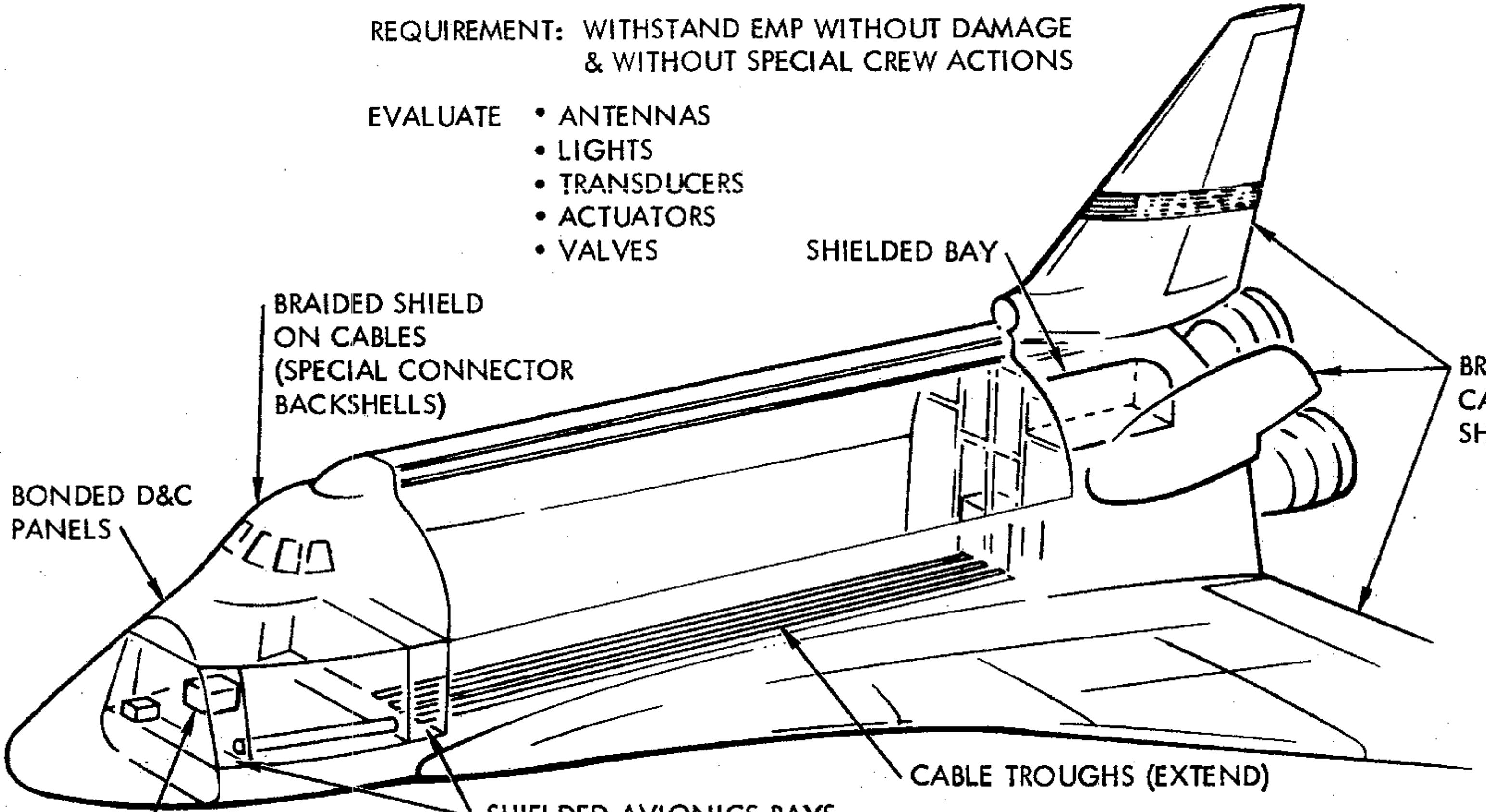

BOX CHANGES
- NDRO COMPUTER MEMORY
- EMP RADIATION DETECTION
- CIRCUMVENTION
- DECREASE BOX INPUT SENSITIVITY

IMPACT
- WEIGHT INCREASE – 194 LB (B/L INCLUDES 125 LB FOR INACCESSIBLE CABLE SHIELDING)
- VEHICLE LEVEL TEST –

HARDENING AVIONICS FROM PROMPT DOSE (CONT)

DETRIMENTAL EFFECTS	SURVIVABILITY ANALYSIS	HARDENING REQUIREMENT
LATCHUP	DETERMINE VULNERABLE COMPONENTS	PRODUCTION SCREENING TEST OF ALL INTEGRATED CIRCUITS, ON FLASH X-RAY MACHINE

WEIGHT IMPACT, PROMPT DOSE HARDENING		
	CASES 1, 2, 3	CASE 4
X-RAY SHIELDING	+5 LB	+5 LB
RADIATION DETECTION	+2 LB	+2 LB
PLATED WIRE MEMORIES	-66 LB	NA
NET REDUCTION	-59 LB	+7 LB

HARDENING AVIONICS TO PREVENT DEGRADATION

REQUIREMENT: WITHSTAND STATED NEUTRON & ELECTRON RADIATION OVER EQUIPMENT LIFE WITHOUT DETRIMENTAL PARAMETER DEGRADATION

DETRIMENTAL EFFECT	SURVIVABILITY ANALYSIS	HARDENING REQUIREMENT
COMPONENT DEGRADATION	EVALUATE SOLID STATE DEVICE PARAMETER DEGRADATION FROM NEUTRON & ELECTRON RADIATION • COMPONENTS • SHIELDING • MISSION ALTERNATIVES	• QUALIFIED PARTS • TEST PROGRAM • PIECE PART TESTS FOR NEUTRONS & TOTAL DOSE • ADD DOSIMETERS

NO WEIGHT CHANGE

AVIONICS HARDENING WEIGHT INCREMENTS

	OPTION NO.			
	1	2	3	4
SHIELDING WT	202	202	202	200
PLATED WIRE MEMORY COMPUTERS; REDUCED POWER, ENVIRON CONTROL & INSTL WT	-139	-139	-139	NA
NET WT INCR	63	63	63	200
ORBITER DRY WT	90	90	90	285
ORBITER GROSS WT	100	100	100	317
SRB	2840	2840	2840	9016

HARDENING COST SUMMARY
($M)

CASE	DDT&E INCR I	DDT&E INCR II	PRODUCTION	OPERATIONS	TOTAL
(1) HARDEN B / L AVIONICS ONLY SAFE RETURN EQUIP FOR PROMPT DOSE. HARDEN ALL EQUIP FOR ENHANCED ELECTRONS	7.77	31.93	7.91	8.46	56.07
(2) HARDEN ALL B / L AVIONICS FOR BOTH PROMPT DOSE & ENHANCED ELECTRONS	9.19	37.77	8.64	8.92	64.53
(3) SAME AS CASE (1) EXCEPT THAT B / L AVIONICS ALREADY HAS FULL LIGHTNING PROTECTION	7.7	31.7	7.7	8.3	55.4
(4) SAME AS CASE (1) EXCEPT HARDEN ONLY SINGLE STRING SAFE RETURN FOR PROMPT DOSE & ELECTRONS	5.15	21.18	3.31	9.56	39.21

PROGRAM COST OPTIONS

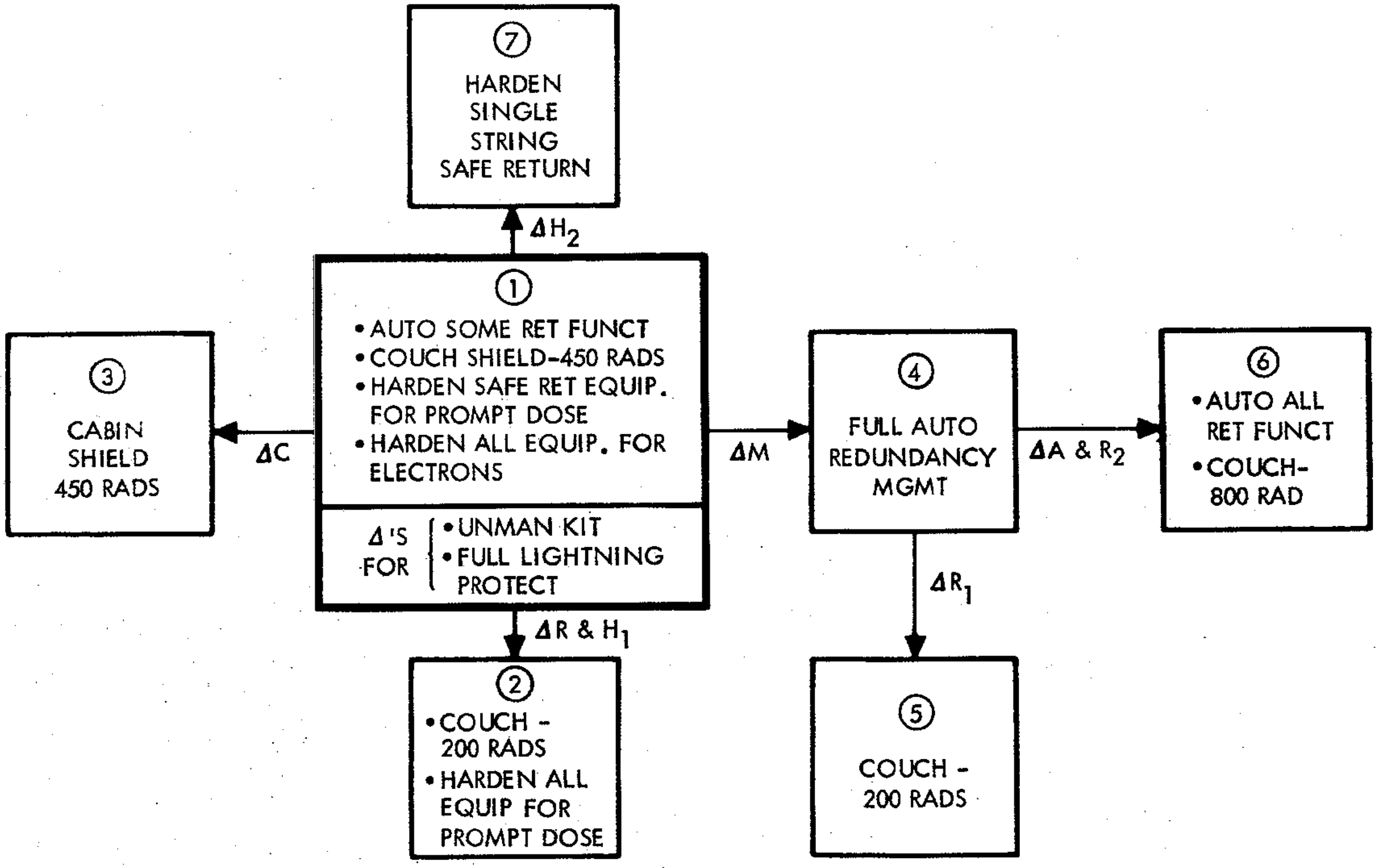

PROGRAM OPTION WEIGHT INCREMENTS

		OPTION NO.						
		1	2	3	4	5	6	7
EQUIP, ETC. WT	AVIONICS HARD.	63	63	63	63	63	63	200
	AUTO-RETURN	66	66	66	203	203	387	66
	CREW PROTECT	142	1,550	1,314	142	1,550	70	142
	TOTAL	271	1,679	1,443	408	1,816	1,150	408
ORBITER DRY WT		387	2,396	2,059	582	2,591	1,641	582
ORBITER GROSS WT		429	2,659	2,286	646	2,876	1,822	646
SRB		12,217	75,689	65,050	18,393	81,865	51,842	18,393

PROGRAM OPTIONS COST COMPARISON
TOTAL PROGRAM COST ($M)

	OPTION						
	1	2	3	4	5	6	7
AVIONICS SURV	56	64	56	56	56	56	39
AUTO-RETURN	5	5	5	16	16	29	5
CREW PROTECT	5	57	48	5	57	2	5
TOTAL	66	126	109	77	129	87	49

PROGRAM OPTION COST COMPARISON ($M)

	OPTION NO.						
	1	2	3	4	5	6	7
DDE&E							
INCR 1	8	11	9	9	10	10	6
INCR 2	34	44	37	37	42	40	23
TOTAL	42	55	46	46	52	50	29
PRODUCTION	9	12	10	9	12	10	4
OPERATIONS	15	60	53	22	66	27	16
COST PER FLIGHT	.04	.15	.13	.05	.16	.07	.04
TOTAL PROGRAM	66	126	109	77	129	88	49

PROGRAM OPTION COST INCREMENTS ($M)

OPTION NO. 1

- AUTOMATE SOME RETURN FUNCTIONS
- COUCH SHIELDING -450 RAD
- HARDEN SAFE RETURN EQUIP FOR PROMPT DOSE
- HARDEN ALL EQUIP FOR ENHANCED ELECTRONS

	DDT&E				
	INCR 1	INCR 2	PROD	OPS	TOTAL
AVIONICS SURVIVABILITY	7.8	31.9	7.9	8.5	56.1
AUTO RETURN	0.4	1.4	0.5	2.7	5.0
CREW PROTECTION	0.1	0.4	0.2	4.0	4.8
TOTAL	8.3	33.7	8.6	15.2	65.9
Δ FOR UNMANNED KIT	-0.2	-0.7	—	—	-0.9
Δ FOR FULL LIGHTNING PROTECTION	—	-0.2	-0.2	-0.2	-0.6

PROGRAM OPTION COST INCREMENTS (CONT)

DELTAS TO OPTION NO. 1

OPTION NO.	CHANGE FROM OPTION NO. 1	DELTA COST FROM OPTION NO. 1 ($M)				
		DDT&E		PROD	OPS	TOTAL
		INCR 1	INCR 2			
2	INCREASE CREW PROTECT. TO 200 RADS	1.1	4.4	2.5	44.2	52.1
	HARDEN ALL EQUIP. FOR PROMPT DOSE	1.4	5.9	0.7	0.4	8.5
	TOTAL	2.5	10.2	3.2	44.6	60.6
3	SHIELD CABIN INSTEAD OF SEATS	0.8	3.2	1.2	37.9	43.1
4	ADD AUTO. REDUNDANCY MGMT	0.9	3.6	0.6	6.3	11.4
5	ADD AUTO. REDUNDANCY MGMT	0.9	3.6	0.6	6.3	11.4
	INCREASE CREW PROTECT. TO 200 RADS	1.1	4.4	2.5	44.2	52.1
	TOTAL	2.0	8.0	3.1	50.5	63.5
6	ADD AUTO. REDUNDANCY MGMT AUTO. ALL RETURN FUNCTIONS	1.7	6.9	1.6	13.8	24.0
	DECREASE CREW PROTECT. TO 800 RADS	-0.1	-0.2	-0.1	-2.0	-2.2
	TOTAL	1.7	6.7	1.5	11.8	21.8
7	HARDEN ONLY SINGLE STRING AUTO-RETURN EQUIP.	-2.6	-10.7	-4.4	+1.1	-16.8

PROGRAM OPTIONS COST COMPARISON

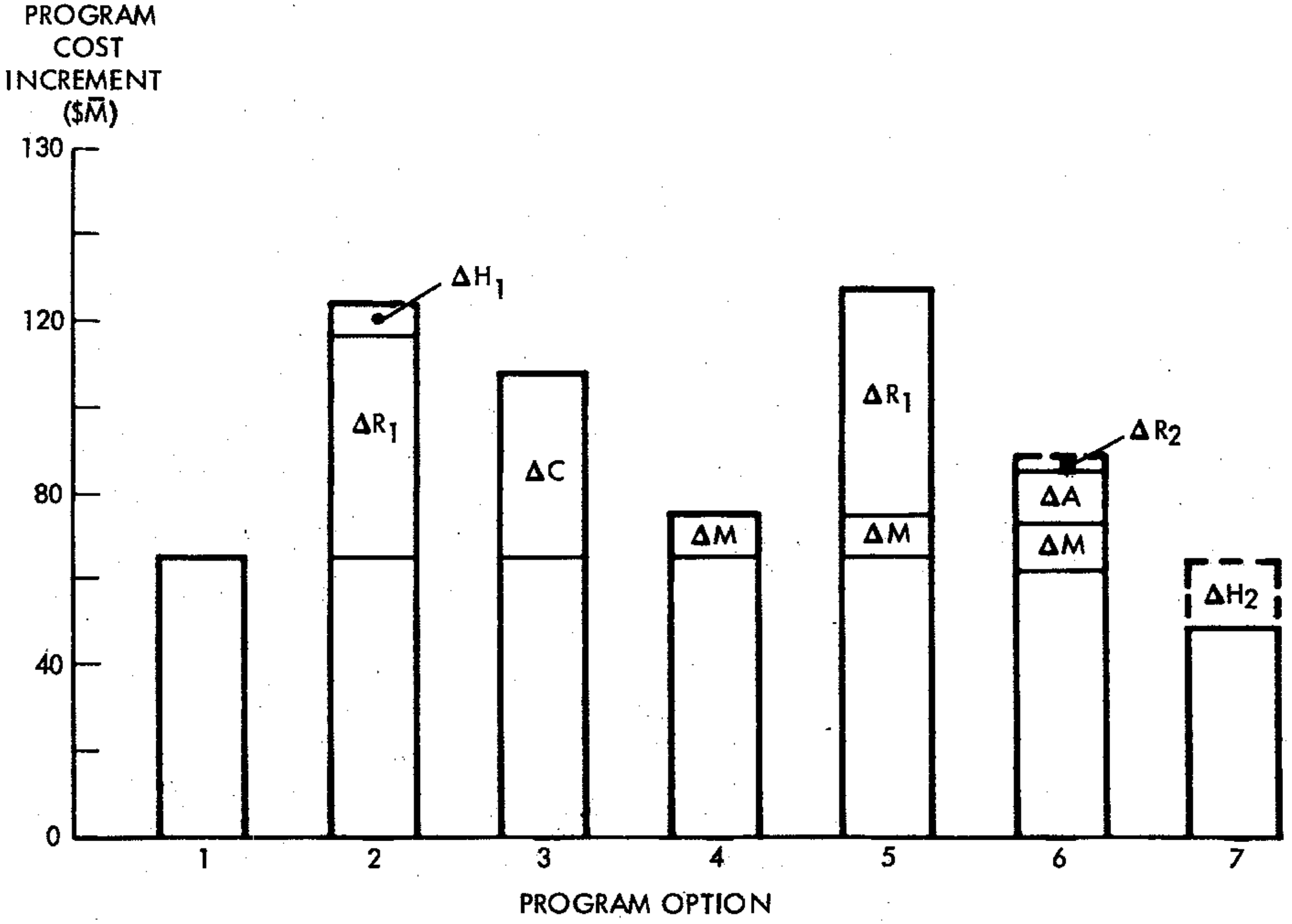

RADIATION SURVIVABILITY COST—CASE 1
MILLIONS OF REAL YEAR DOLLARS

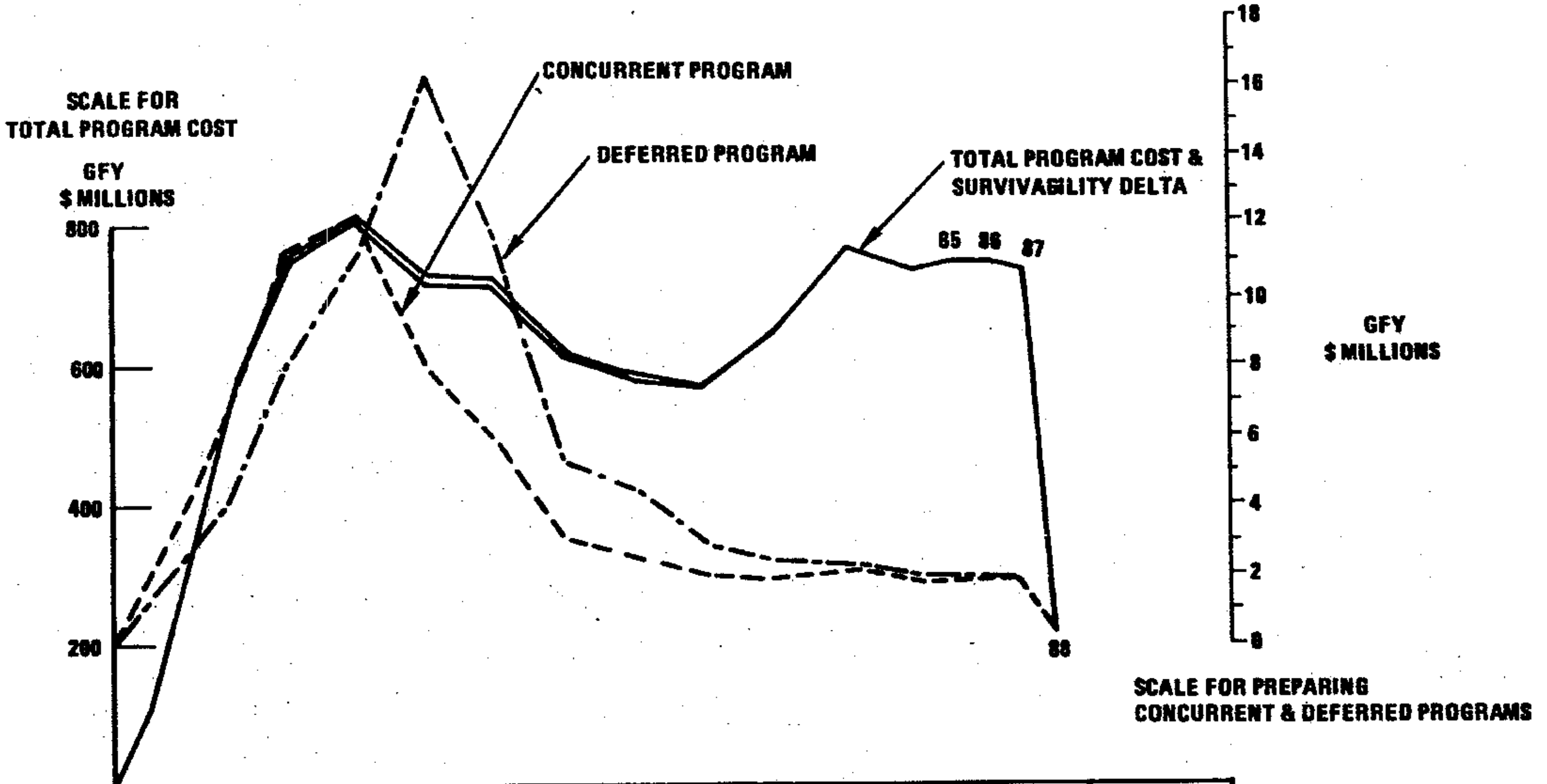

GFY	73	74	75	76	77	78	79	80	81	82	83	84	85-88	TOTAL
BASELINE COST $	129	504	753	807	720	719	612	577	572	646	770	741	2464	10014
CONCURRENT SURVIVABILITY PROGRAM $	2	6	11	12	8	6	3	3	2	2	2	2	7	66
TOTAL	131	510	764	819	728	725	615	580	574	648	772	743	2471	10080
DEFERRED SURVIVABILITY PROGRAM $	1	4	8	11	16	12	5	5	3	3	3	2	7	77
TOTAL	130	508	761	818	736	731	617	582	575	649	772	743	2471	10091

RADIATION SURVIVABILITY COST—CASE 2
MILLIONS OF REAL YEAR DOLLARS

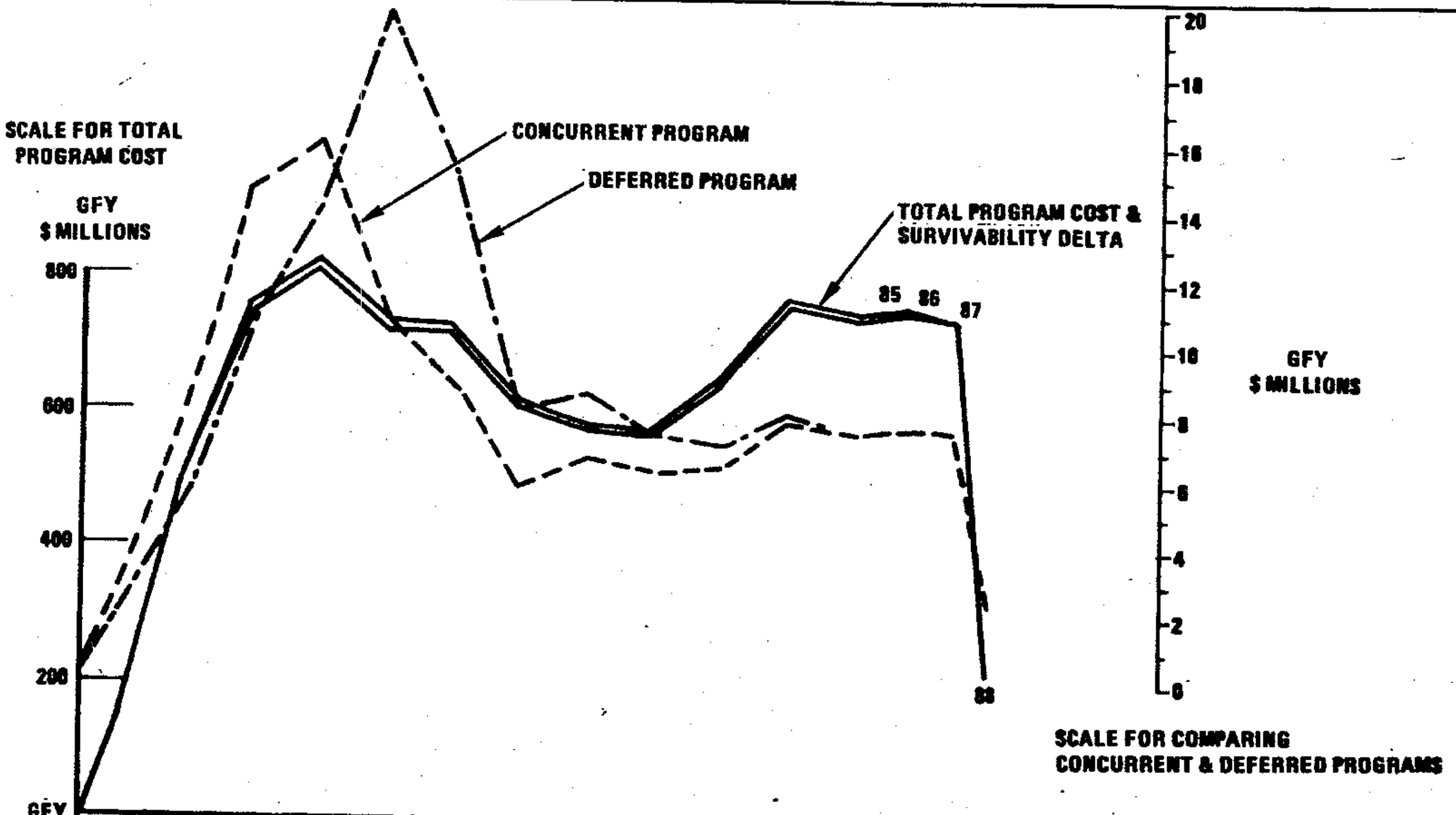

	73	74	75	76	77	78	79	80	81	82	83	84	85-88	TOTAL
BASELINE COST $	128	504	753	807	720	719	612	577	572	646	770	741	2464	10014
CONCURRENT SURVIVABILITY PROGRAM $	3	8	15	16	11	9	6	6	6	6	7	7	26	126
TOTAL	132	612	768	823	731	728	618	583	578	652	777	748	2490	10140
DEFERRED SURVIVABILITY PROGRAM $	2	5	11	14	20	15	8	7	7	7	8	8	26	138
TOTAL	131	509	764	821	740	734	620	584	579	653	778	749	2490	10152

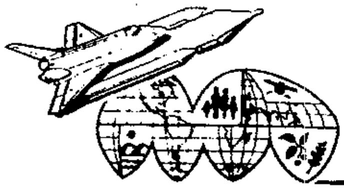

IMPLEMENTATION PLAN
CONCURRENT

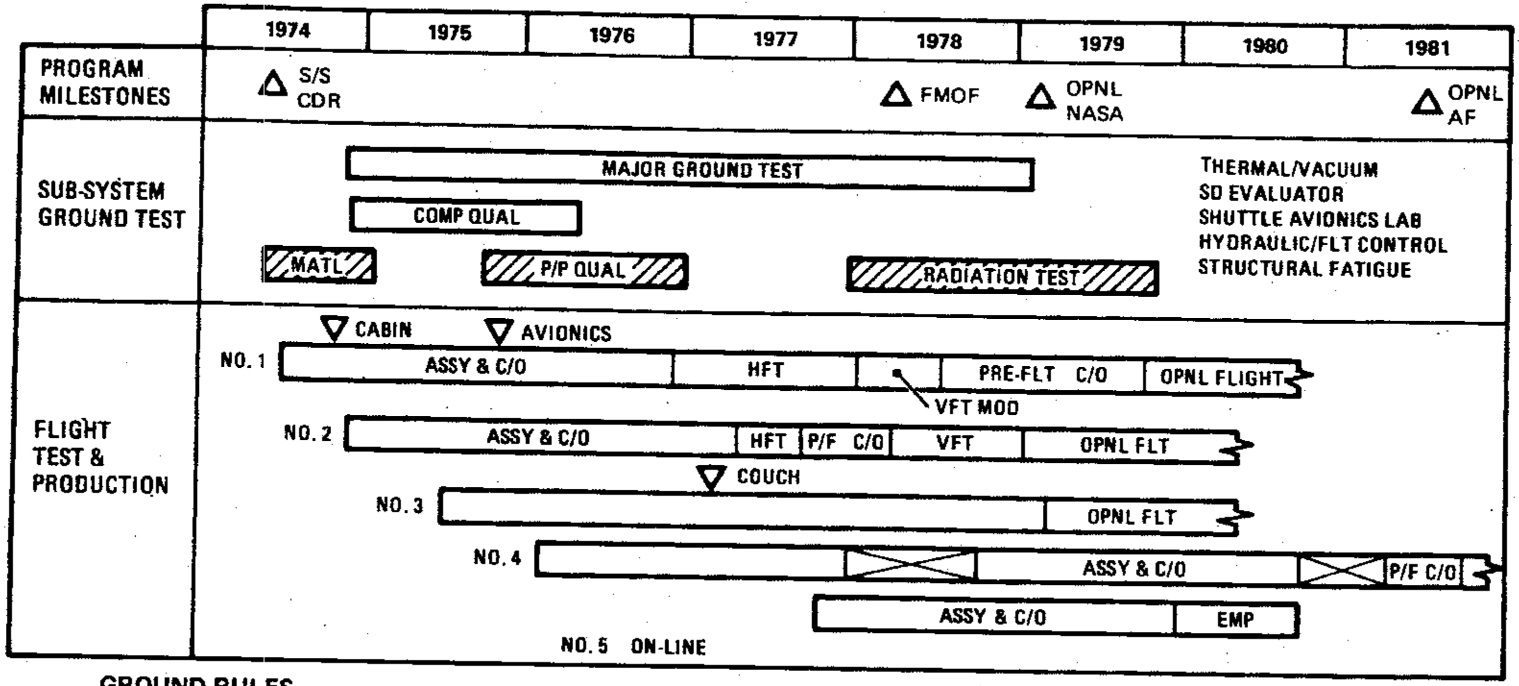

GROUND RULES

- DESIGN RELEASE PER BASELINE PROGRAM
- NO IMPACT ON FMOF CERTIFICATION & SCHEDULES
- AF OPERATIONAL CERTIFICATION BY MID-1981

IMPACT

- INCREASED TEST LOST-RADIATION, EMP, P/P QUAL & MATERIAL
- NO IMPACT ON MAJOR GROUND OR FLIGHT TEST COUCH VS CABIN SHIELDING
- INCREASED PROGRAM COST FOR ADDITIONAL EQUIPMENT AND DECREASED USE OF O-T-S HARDWARE

LEGEND

- ▨ △ EFFORT
- ▽ 1ST HARDWARE

IMPLEMENTATION PLAN
PHASED

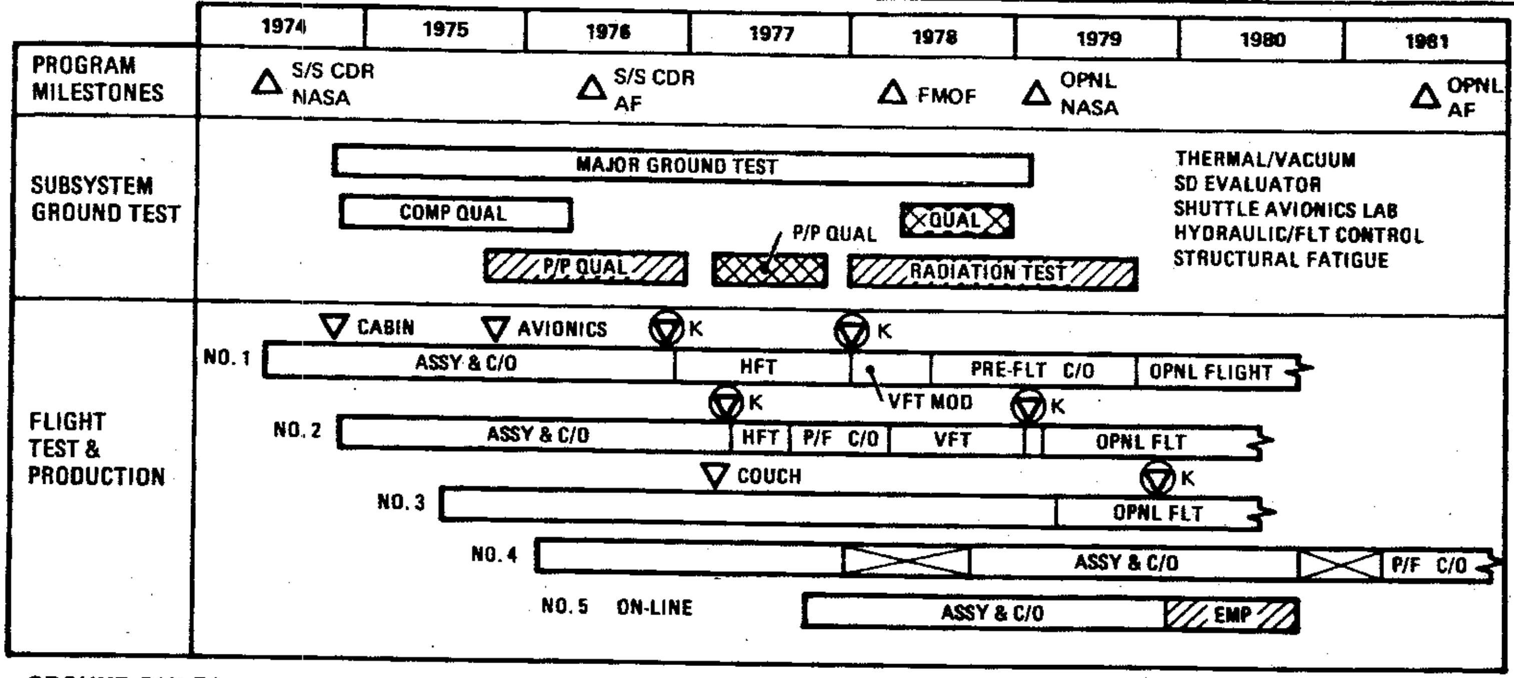

GROUND RULES

- REQUIRED HARDWARE CONCURRENT WITH BASELINE COMPUTER, SOFTWARE, CABLES, COUCH, & SEL WIRING AND SWITCHES
- NEW DESIGN AVIONICS HARDENING – CONCURRENT
- O-T-S HARDENING PHASED
- ONE COUCH DESIGN FOR NASA/DOD – NO PHASING
- VERTICAL & HORIZONTAL FLIGHT TEST ON NO. 1 – CONCURRENT WITH BASELINE

LEGEND

- (cross-hatched box) △ TO CONCURRENT
- (▽ in circle) K 1ST HARDWARE KITS

IMPACT – (DELTA TO CONCURRENT)

- PROGRAM COST INCREASE FOR REPLACING O-T-S HARDWARE
- ADDITIONAL TEST COST
- ADDITIONAL KITTING COSTS

AUTO RETURN

- PARTIAL AUTO RETURN COST IS SMALL ($5M̄)
- ADDING AUTO REDUNDANCY MGMT TRIPLES COST ($16M̄)
- AUTOMATING ALL FUNCTIONS DOUBLES ABOVE COST ($29M̄)
- COMMONALITY WITH UNMANNED KIT REDUCES COST BY:

  $0.9M̄ FOR PARTIAL AUTO RETURN CASE
  $5.2M̄ FOR FULL AUTO RETURN CASE

CREW PROTECTION

- CABIN SHIELDING COSTS 10 TIMES AS MUCH AS SEAT SHIELDING (PRIMARILY FOR VEHICLE RESIZING)
- SEAT SHIELDING COST IS SMALL FOR 450-800 RAD LEVEL ($2-5M̄) BUT INCREASES RAPIDLY AT LOWER LEVELS ($57M̄ AT 200 RAD)
- REMOVING 4TH MAN FOR USAF MISSIONS ELIMINATES NEED FOR VEHICLE RESIZING IF
  - 3 SEATS ARE SHIELDED
  - CREW PROTECTED TO $\geq$450 RADS

CONCLUSIONS (CONT)

AVIONICS HARDENING

- HARDENING ONLY SAFE-RETURN EQUIP FOR PROMPT DOSE SAVES \$8M̄ (\$64-56M̄)
- HARDENING ONLY SINGLE-STRING SAFE-RETURN EQUIP FOR PROMPT DOSE & ELECTRONS SAVES AN ADDITIONAL \$17M̄ (\$56-39M̄)
- IF B/L HAS FULL LIGHTNING PROTECTION, HARDENING COST REDUCED BY < \$1M̄

PROGRAM OPTIONS

- LOWEST COST IS OPTION NO. 7

• HARDEN SINGLE-STRING RETURN EQUIP	\$ 39M̄
• PARTIAL AUTO-RETURN	5
• CREW PROTECTED TO 450 RADS/SHIELDED SEAT	5
	\$ 49M̄

- HIGHEST COST IS OPTION NO. 5

• HARDEN SAFE RETURN EQUIP FOR PROMPT DOSE	\$ 56M̄
• PARTIAL AUTO-RETURN WITH REDUNDANCY MGMT	16
• CREW PROTECTED TO 200 RADS/SHIELDED SEAT	57
	\$129M̄

IMPLEMENTATION PLAN

CONCURRENT APPROACH

- NO IMPACT ON MAJOR GROUND OR FLIGHT TEST SCHEDULES
- TEST COSTS INCREASED—RADIATION, PIECE PARTS, EMP

PHASED APPROACH (DELTAS TO CONCURRENT APPROACH)

- ADDITIONAL TEST COSTS
- ADDITIONAL COSTS FOR KITS - AUTO RETURN, DEFERRED HARDENED AVIONICS INSTALLATION
- PROGRAM COST INCREASE FOR REPLACING OFF-THE-SHELF EQUIPMENT

RECOMMENDATIONS

	PROGRAM COST
AUTO-RETURN	$5.0M
• PARTIAL AUTO-RETURN	
• WIRING IN B/L	
• RETROFIT INTERFACE BOXES	
CREW PROTECTION	
• INSTALL 3 SHIELDED SEATS (450 RAD) & REMOVE 4TH SEAT FOR USAF MISSIONS (i.e. KIT FOR USAF MISSIONS)	$0.4M
AVIONICS HARDENING	$ <45M
• HARDEN ONLY SINGLE-STRING SAFE RETURN EQUIP. FOR PROMPT DOSE, HARDEN ALL EQUIP. FOR ELECTRONS	

SUMMARY

AUTO-RETURN

CREW PROTECTION

AVIONICS HARDENING

OBJECTIVES OF AUTO RECOVERY STUDY

DEFINITION OF ALTERNATE RECOVERY AVIONICS SYSTEMS REFLECTING:

- DEGREES OF CREW PARTICIPATION (WITH DEFINITION OF SPECIAL PROVISIONS)
- DEGREES OF EFFECTIVE REDUNDANCY LEVEL
- EXISTENCE OR NON-EXISTENCE OF UNMANNED FLIGHT KIT

ASSESSMENT OF ALTERNATE SYSTEMS IN TERMS OF:

- MASS PROPERTY IMPACTS
- TECHNICAL RISK
- COST IMPACT
    - DDT&E, PRODUCTION, OPERATION
    - HARDWARE, SOFTWARE

AUTO RECOVERY STUDY APPROACH

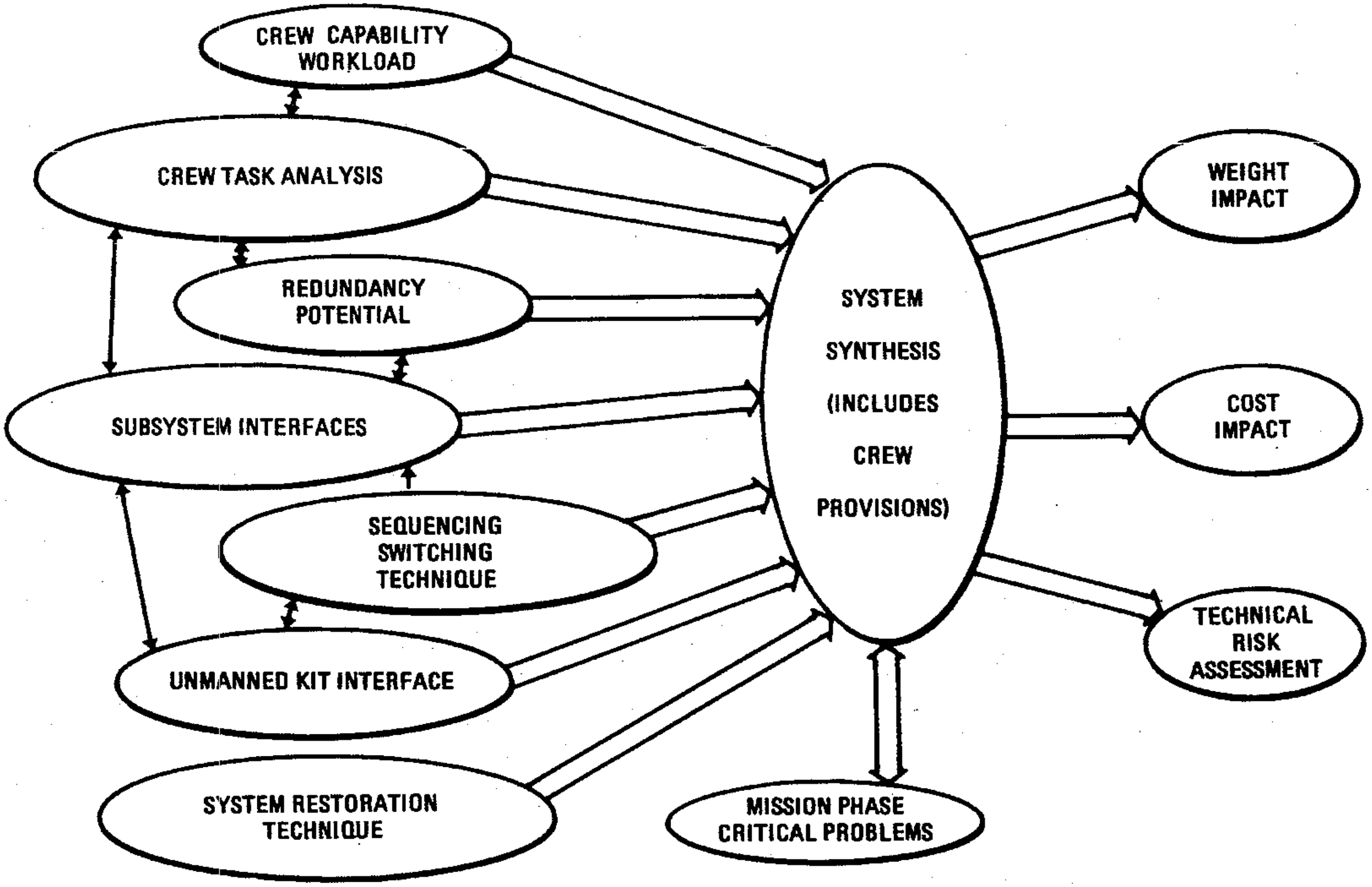

AUTO RECOVERY PROVISIONS

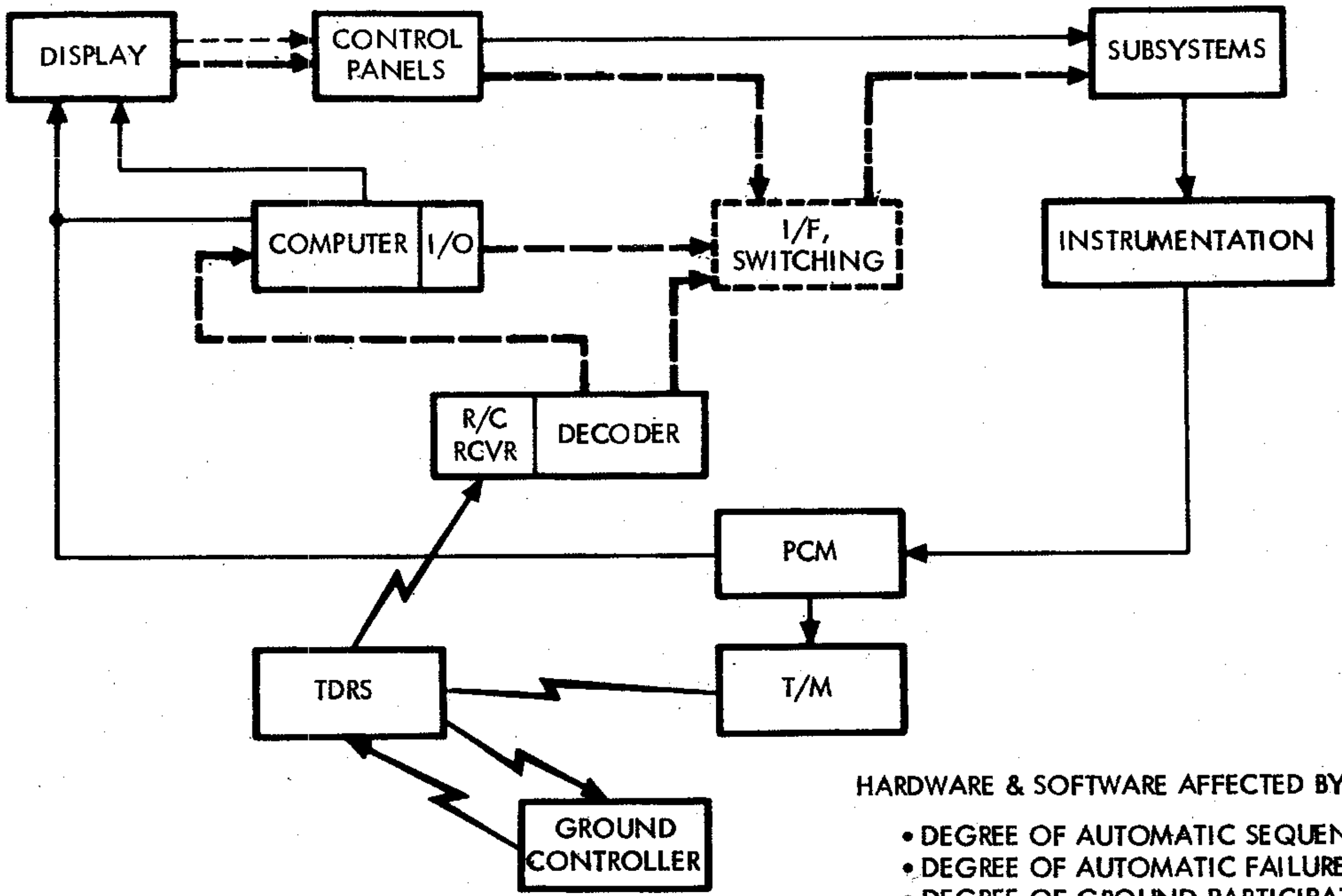

HARDWARE & SOFTWARE AFFECTED BY:

- DEGREE OF AUTOMATIC SEQUENCING
- DEGREE OF AUTOMATIC FAILURE SURVIVAL
- DEGREE OF GROUND PARTICIPATION
- UNMANNED KIT COMMONALITY

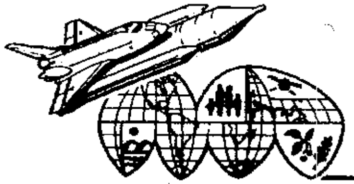

CREW POST IRRADIATION PERFORMANCE

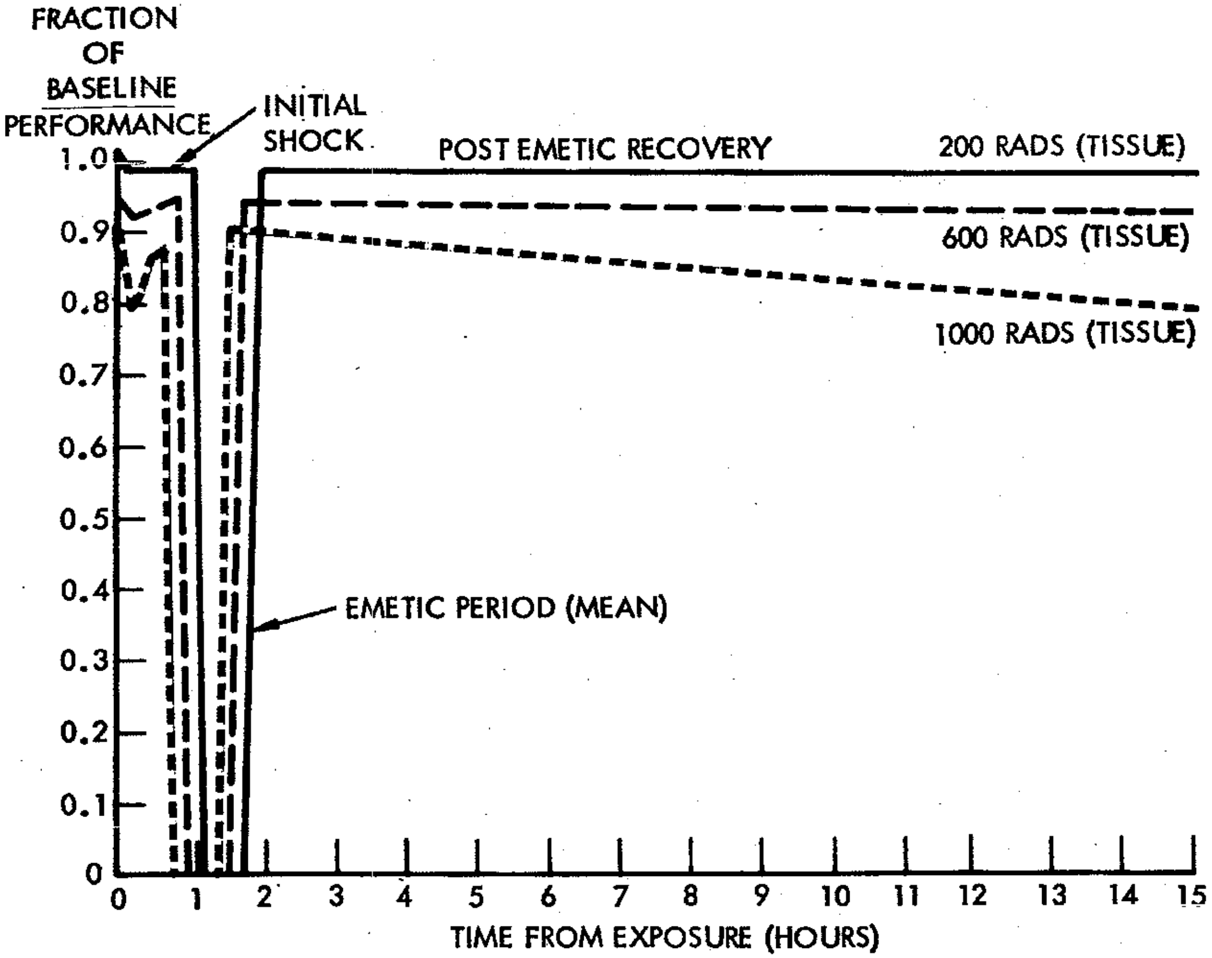

SYMPTOMS

INITIAL SHOCK

- DEGRADATION IN MOTOR SKILLS
- LISTLESSNESS
- APATHY
- GASTRO INTESTINAL DISTRESS

EMETIC PERIOD

- VOMITING
- RETCHING
- TOTAL INCAPACITATION

POST-EMETIC

- FATIGUE
- GASTRO INTESTIONAL DISTRESS
- HEADACHE
- SWELLING OF EYELIDS
- ERYTHEMA

SEVERITY OF SYMPTOMS INCREASES WITH DOSE

CHARACTERISTICS OF EMETIC PERIOD

- PROJECTILE VOMITING
- SPASMOTIC RETCHING 30 OR MORE TIMES
- ONSET & DURATION A FUNCTION OF DOSE
- FREQUENCY & INTENSITY RELATED TO TIME OF LAST MEAL & TO DOSE LEVEL
- CAUSES NEARLY TOTAL INCAPACITATION

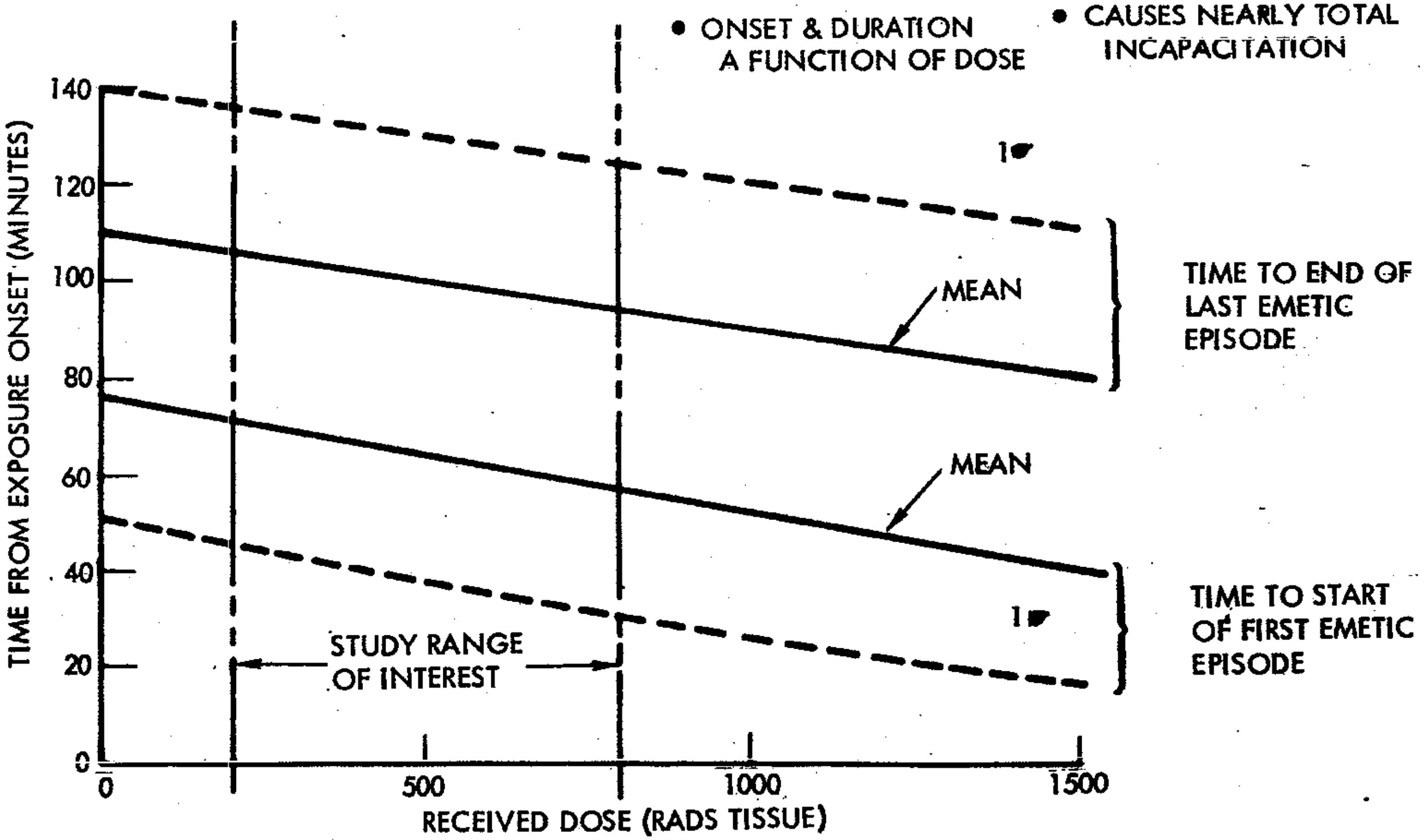

RECOMMENDED POST EXPOSURE CREW UTILIZATION

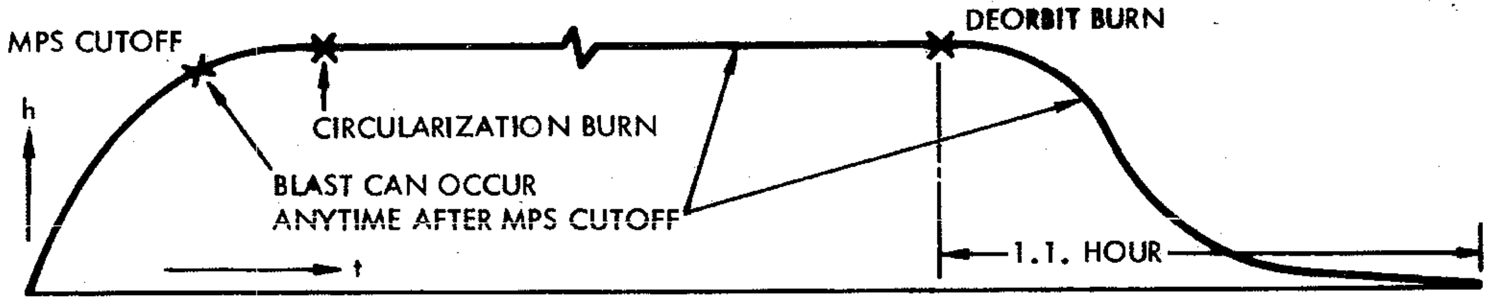

	200 OR 450 RADS DOSE (TISSUE)	800 RADS DOSE (TISSUE)
EXPECTED CAPABILITY		
DURING EMETIC PERIOD	NO PERFORMANCE	NO PERFORMANCE
BEFORE & AFTER EMETIC PERIOD	DEGRADED PERFORMANCE CANNOT DO TASKS THAT: • ARE PHYSICALLY DEMANDING • REQUIRE JUDGMENT • ARE TIME CRITICAL	NO PERFORMANCE
AUTOMATION RECOMMENDED		
ON-ORBIT	ONLY TIME-RESTRICTIVE TASKS (e.g. OMS BURN PREPARATION)	ALL TASKS
POST DEORBIT BURN	ALL TASKS (INHERENTLY TIME-RESTRICTIVE	ALL TASKS
OPERATIONAL POLICY		
DEORBIT INITIATION	DELAY UNTIL AFTER EMETIC PERIOD	AT FIRST OPPORTUNITY

CREW TASK ANALYSIS

DEVELOPMENT OF MISSION PHASE TIMELINES

ANALYSIS OF INDIVIDUAL SUBSYSTEM CONTROL NEEDS

CREW RECOVERY TASKS

TASK	TIME	METHOD	STIMULUS	BASELINE INTERFACE
START-UP OF APU'S (CONT)				
4. POSITION HYDRAULIC CIRCULATION PUMP MOTOR SWITCHES (4) TO "OFF"	ORBIT	4 TOGGLE SWITCHES	PROCEDURAL	DISCRETE CONTACT CLOSURE (8 WIRES)
5. POSITION HYDRAULIC MAIN PUMP SWITCHES (4) TO "DEPRESS"	ORBIT	4 TOGGLE SWITCHES	PROCEDURAL	DISCRETE CONTACT CLOSURE (8 WIRES)
6. POSITION APU CONTROL SWITCHES FROM "PREHEAT" TO "RUN"	ORBIT	4 TOGGLE SWITCHES	PROCEDURAL	DISCRETE CONTACT CLOSURE (8 WIRES)

80 TASKS
242 SWITCHING ACTIONS

BASIC RECOVERY SEQUENCE AUTOMATION REQUIREMENTS

	TASKS	SWITCHING ACTIONS	HARDWARE (CONTROL WIRE INTERFACES)	SOFTWARE (32-BIT WORDS)
FULLY AUTOMATED RECOVERY SEQUENCE	80	242	581	1900
ONLY TIME-RESTRICTIVE RECOVERY TASKS AUTOMATED	24	45	102	425

PLUS REVERSION OF THE MANUAL BACKUP NOSE GEAR RELEASE MECHANISM TO A HYDRAULIC SYSTEM

REDUNDANCY MANAGEMENT AUTOMATION

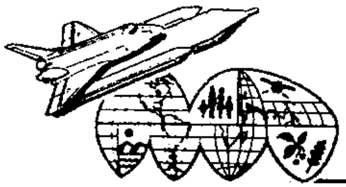

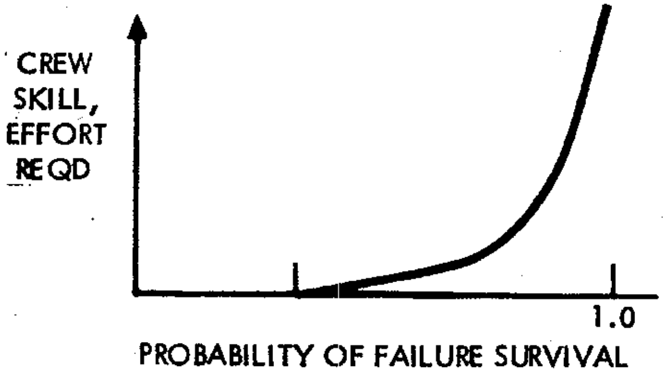

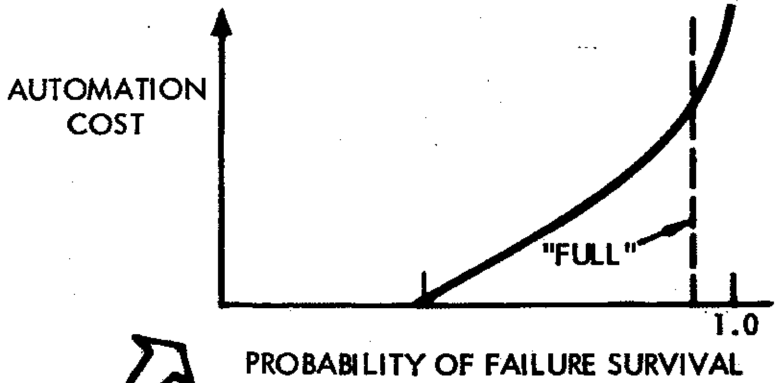

EQUIPMENT	FAILURE INDICATION	CORRECTIVE ACTION 1ST FAILURE	CORRECTIVE ACTION 2ND FAILURE	HARDWARE	SOFTWARE (32-BIT)
ANTENNAS (UHF, L)	LOSS OF SIGNAL FOR TACAN, ATC VOICE	SWITCH ON SIGNAL STRENGTH	SWITCH ON SIGNAL STRENGTH	—	150
STDN/SGLS DECODER	INVALID CMDS, BITE, SELF-MONITORING	MAN. SWITCH	—	REMOTE DRIVER	150
TACAN	LOSS OF SIGNAL (BITE, SELF-MONITORING)	SWITCH BY VOTING TECHNIQUE	SWITCH BY INERTIAL & TREND DATA	REMOTE DRIVER	200

REDUNDANCY MANAGEMENT AUTOMATION REQUIREMENTS

	SWITCHES	HARDWARE (CONTROL WIRE INTERFACES)	SOFTWARE (32-BIT WORDS)
FULLY AUTOMATED RECOVERY	127	296	7800

PANEL SUPPLY VOLTAGE SWITCHING

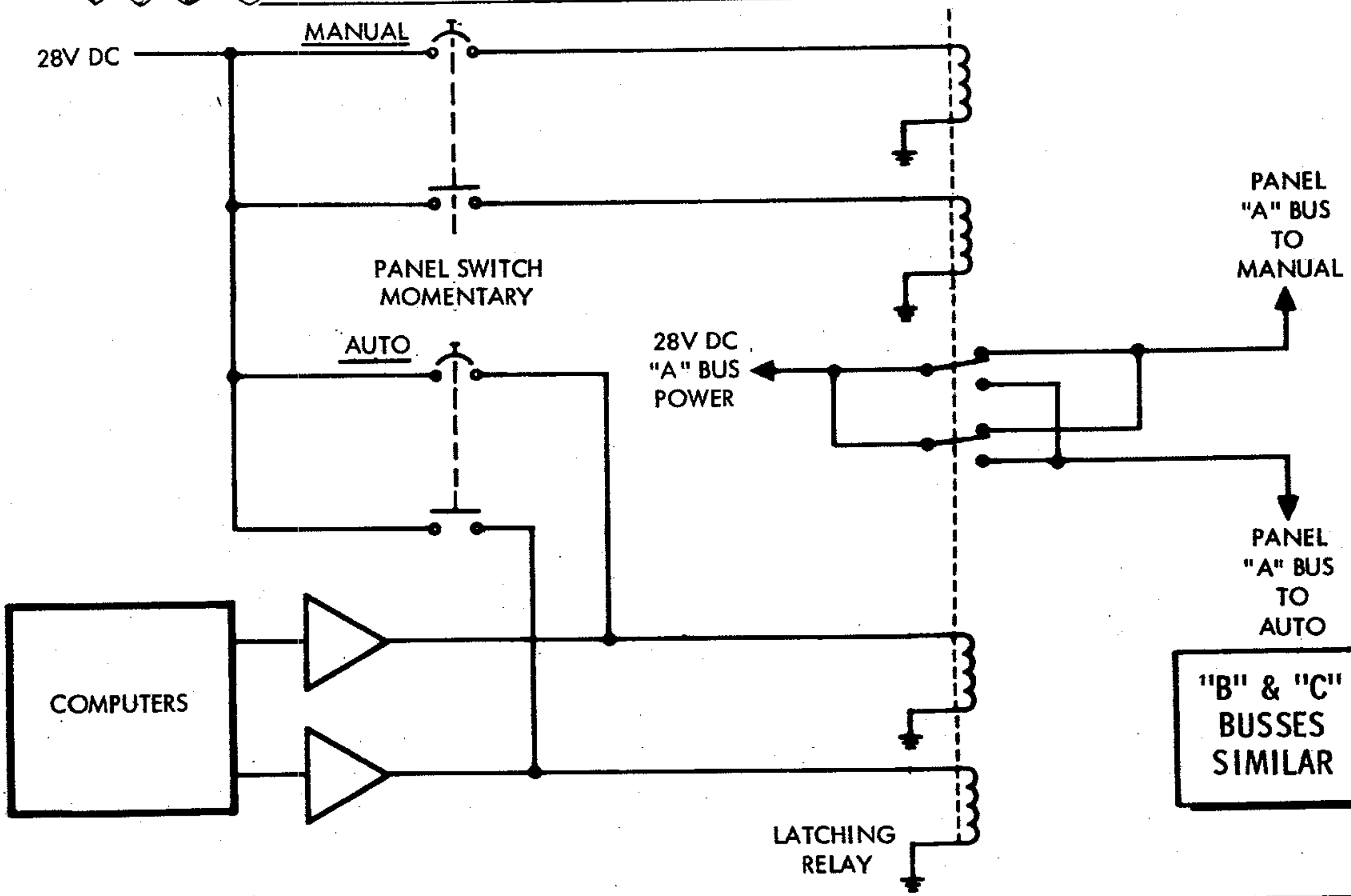

"B" & "C"
BUSSES
SIMILAR

AUTOMATIC CONTROL APPROACH

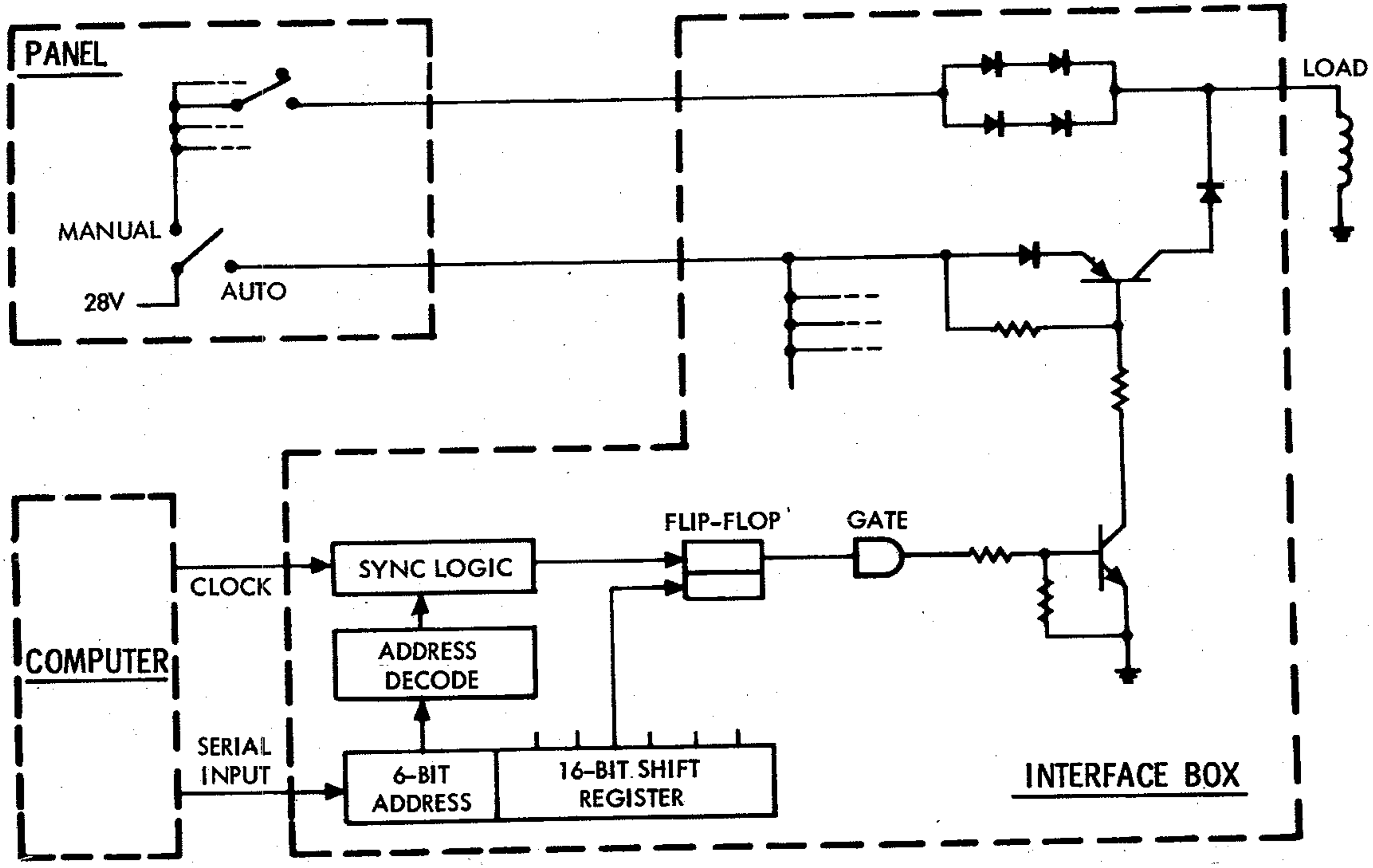

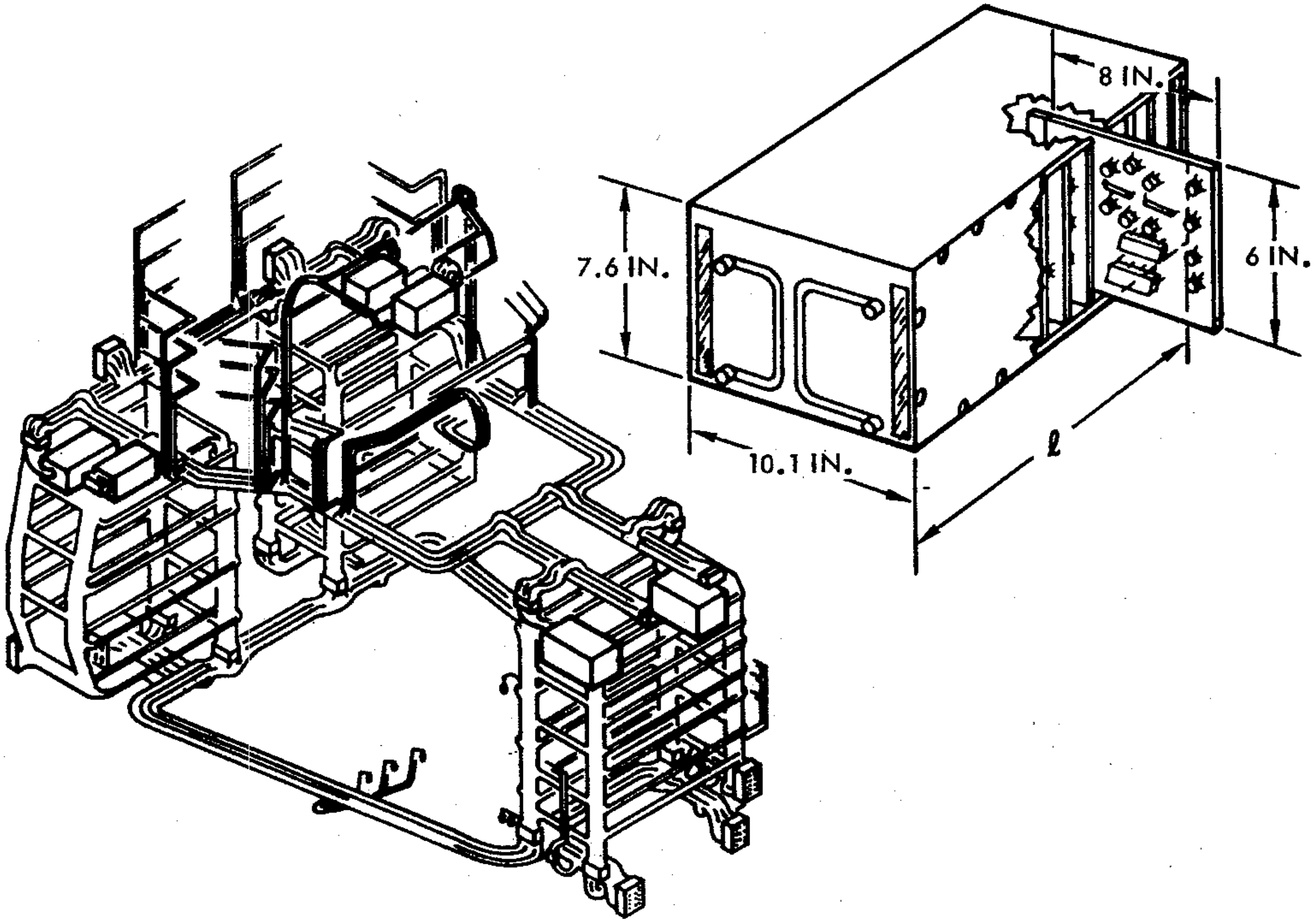
8 IN.
7.6 IN.
6 IN.
10.1 IN.
ℓ

INFLUENCE OF UNMANNED FIRST FLIGHT OPTION (UFF)

- SOME ASPECTS OF AUTO RECOVERY & UFF INCOMPATIBLE
    - UFF MINIMUM SCAR
    - UFF EQUIPMENT PERMITTED TO REPLACE SEATS
    - NO CONTROL SWITCHOVER REQD FOR UFF

- ONLY MEANINGFUL COMBINATION IS UFF ADD-ON TO AUTO RECOVERY

- DELTA AUTO RECOVERY IMPACT
    - THEREFORE DETERMINED BY IDENTIFICATION OF COMMON S/W & H/W ELEMENTS

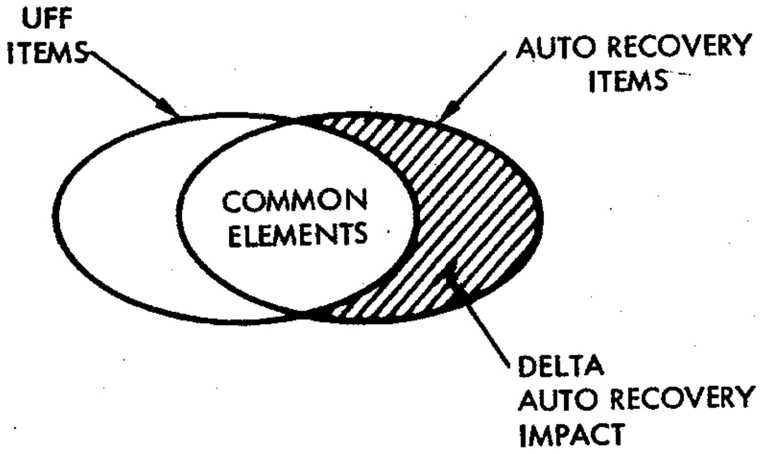

IMPACT OF "SINGLE STRING" APPROACH

AUTO RECOVERY MECHANIZATION ESSENTIALLY UNCHANGED FROM MINIMUM MULTI-STRING CASE (NO. 2)

- LIKE REDUNDANT SUBSYSTEMS (MOST) ASSUMED TO BE EQUALLY HARD & THEREFORE USABLE
- ALL AVAILABLE SUBSYSTEM STRINGS MUST BE CONTROLLED
- HYDRAULIC BACKUP NOSE WHEEL RELEASE CAN BE OMITTED IN EITHER CASE
- USE OF BACKUP COMPUTER (RATHER THAN PRIMARY COMPUTERS) HAS NO IMPACT ON THE SYSTEM
    - SAME SOFTWARE
    - AVAILABLE INTERFACES
- RECOVERY SEQUENCE IDENTICAL
- NO AUTOMATED REDUNDANCY MANAGEMENT

MECHANIZATION REQUIREMENTS FOR AUTO RECOVERY ALTERNATES

REQUIREMENT	CASE 1 FULL AUTO SEQUENCING, FULL AUTO REDUND MGMT		CASE 2 PARTIAL AUTO SEQUENCING, NO AUTO REDUND MGMT		CASE 3 PARTIAL AUTO SEQUENCING, FULL AUTO REDUND MGMT
	WITHOUT UFF	WITH UFF	WITHOUT UFF*	WITH UFF	WITHOUT UFF
AUTO SEQUENCING					
CREW FUNCTIONS	80	–	24	–	24
SWITCHES	242	56	45	0	45
CONTROL WIRES (20% GROWTH)	698	161	122	0	122
HYDRAULIC NOSE GEAR RELEASE BACKUP	REQD	–	–	–	REQD
SOFTWARE (32-BIT WORDS)	1900	375	425	0	425
AUTO REDUNDANCY MGMT					
SWITCHES	127	0	0	0	127
CONTROL WIRES (20% GROWTH)	355	0	0	0	355
SOFTWARE (32-BIT WORDS)	7800	500	0	0	7800
TOTALS					
CONTROL WIRES (20% GROWTH)	1053	161	122	0	477
SOFTWARE (32-BIT WORDS)	9700	875	425	0	8225

*SAME REQMTS AS "SINGLE STRING" CASE

PHYSICAL SUMMARY FOR AUTO RECOVERY ALTERNATES

IMPACTS	CASE 1 FULL AUTO SEQUENCING, FULL AUTO REDUND MGMT WITHOUT UFF	CASE 1 WITH UFF	CASE 2 PARTIAL AUTO SEQUENCING, NO AUTO REDUND MGMT WITHOUT UFF*	CASE 2 WITH UFF	CASE 3 PARTIAL AUTO SEQUENCING, FULL AUTO REDUND MGMT WITHOUT UFF
TOTAL CONTROL WIRES (20% GROWTH)	1053	↑	122	↑	477
INTERFACE BOX LENGTH (IN.) (HEIGHT = 7.6 IN., DEPTH = 10.1 IN.)	8.5		3.0		4.3
EQUIPMENT WEIGHT (LB)		OPERATIONAL IMPACT WITHOUT UFF		OPERATIONAL IMPACT WITHOUT UFF	
INTERFACE BOXES (6)	95		33		48
WIRE	210		24		95
PANEL SWITCHES	3		3		3
HYDRAULIC NOSE GEAR RELEASE	37		0		37
TOTAL RECOVERY EQUIPMENT	345		60		183
POWER REQMT (WATTS)	905	↓	112	↓	425

*SAME IMPACT AS "SINGLE STRING" CASE

COST SUMMARY FOR AUTO RECOVERY ALTERNATES

COSTS	CASE 1		CASE 2		CASE 3
	FULL AUTO SEQUENCING, FULL AUTO REDUND MGMT		PARTIAL AUTO SEQUENCING, NO AUTO REDUND MGMT		PARTIAL AUTO SEQUENCING, FULL AUTO REDUND MGMT
	WITHOUT UFF	WITH UFF	WITHOUT UFF*	WITH UFF	WITHOUT UFF
DDT&E					
RECOVERY EQUIPMENT (ELECTRONICS & HYDRAULICS)	3.805	1.907	0.992	0.348	2.007
SOFTWARE	2.910	0.262	0.128	0	2.468
SUPPORTING VEHICLE SYSTEMS	2.437	1.783	0.510	0.383	1.207
RESIZING	1.230	1.230	0.211	0.211	0.639
TOTAL	10.382	5.182	1.841	0.942	6.321
PRODUCTION TOTAL	2.138	2.138	0.471	0.471	1.080
OPERATIONS TOTAL	16.515	16.515	2.719	2.719	8.990
PROGRAM					
RECOVERY EQUIPMENT	5.814	3.916	1.512	0.858	3.071
SOFTWARE	4.220	1.572	0.186	0.058	3.579
SUPPORTING VEHICLE SYSTEMS	3.814	3.160	0.726	0.609	1.857
RESIZING	15.187	15.187	2.607	2.607	7.884
TOTAL	29.035	23.835	5.031	4.132	16.391

* SAME IMPACTS AS "SINGLE STRING" CASE

IMPLEMENTATION PLAN
AUTO RETURN
CONCURRENT

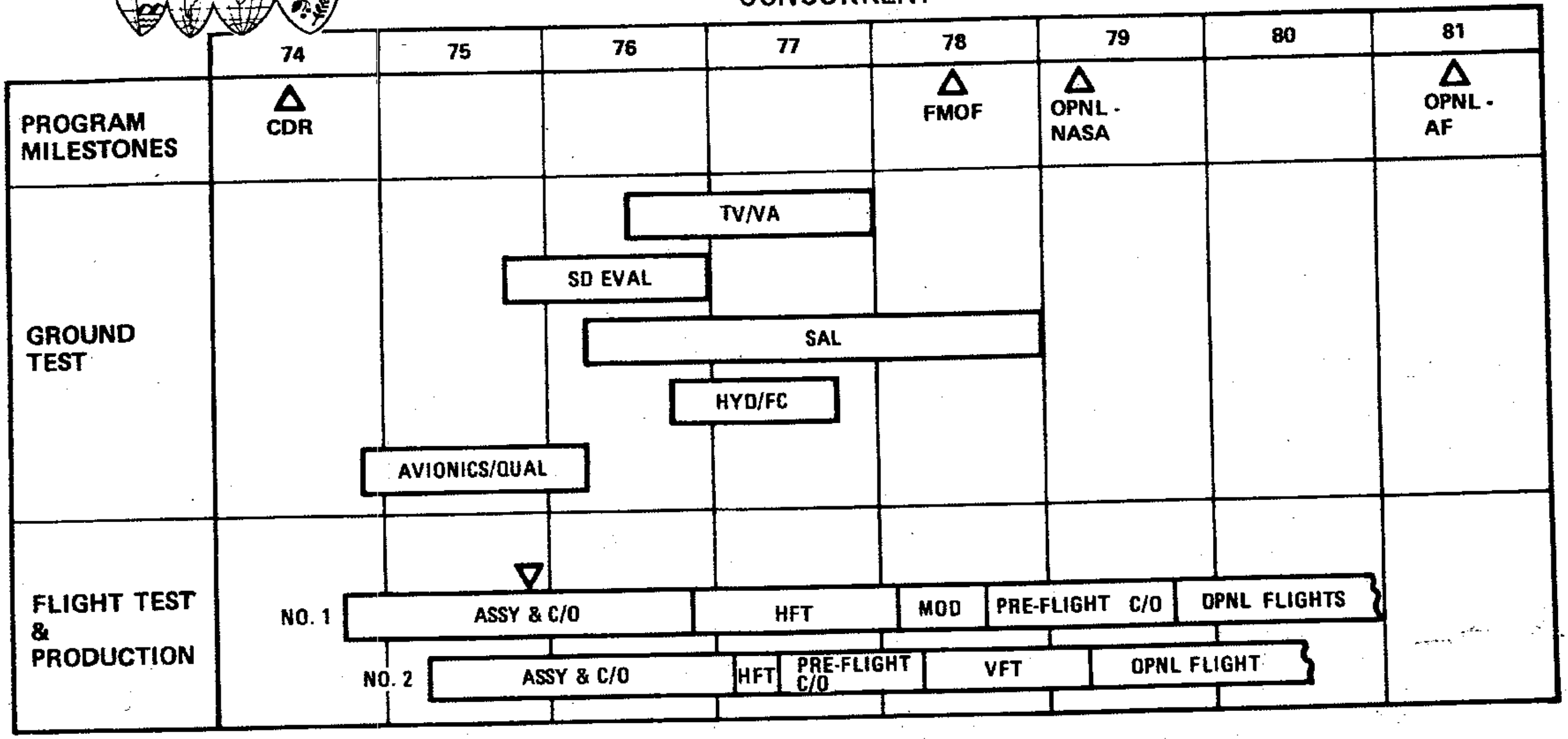

GROUND RULES

- DESIGN RELEASE PER BASELINE PROGRAM
- NO IMPACT ON FMOF CERTIFICATION & SCHEDULES
- AF OPERATIONAL CERTIFICATION BY MID 1981
- AUTO RETURN CERTIFICATION PARALLEL WITH BASELINE

IMPACT

- PROGRAM COST INCREASE – DESIGN & TEST – DUE TO ADDITIONAL EQUIPMENT & ADDITIONAL MODES & FUNCTIONS

LEGEND

☒ △ TO BASELINE

▽ 1ST AVIONIC HARDWARE

IMPLEMENTATION PLAN
AUTO RETURN
PHASED

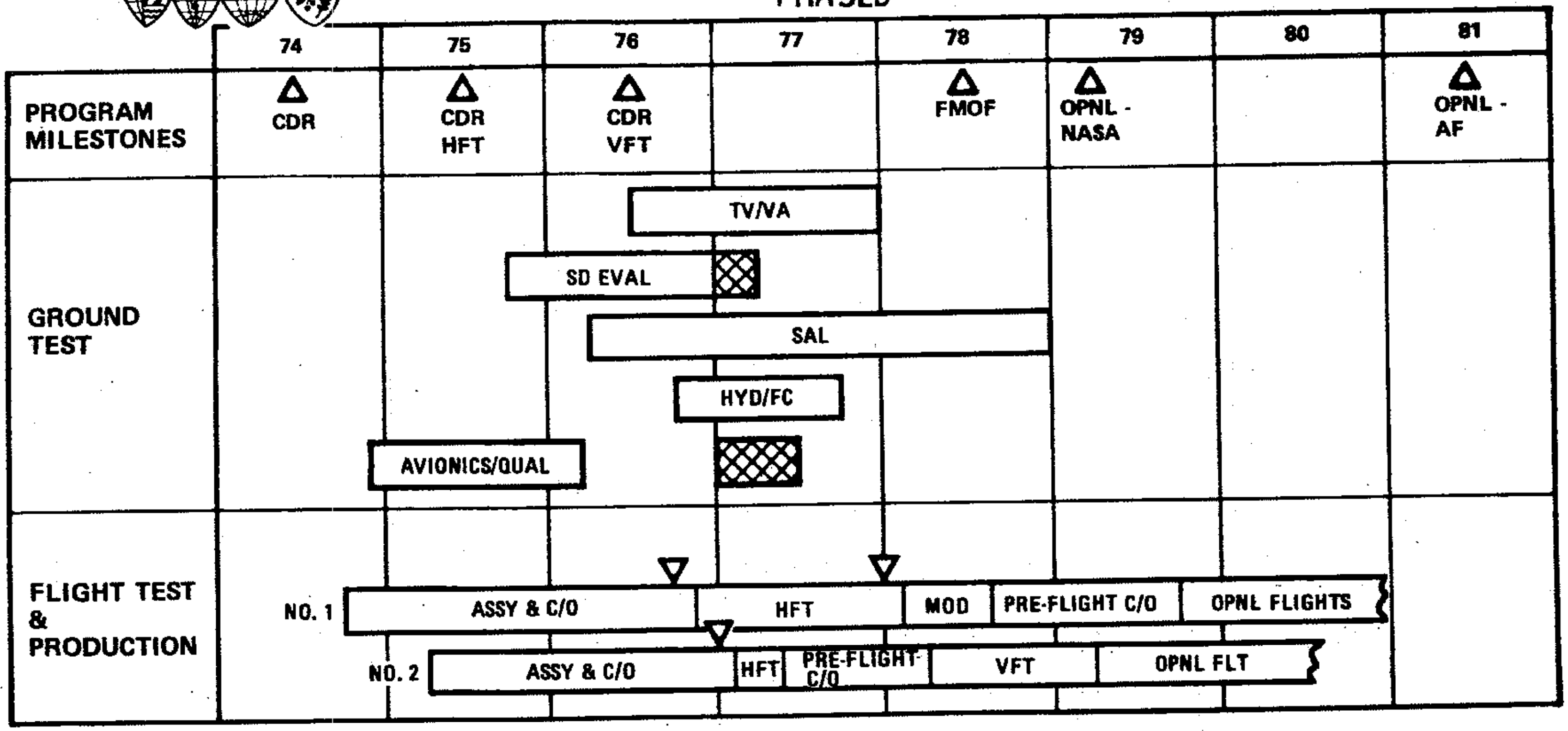

GROUND RULES

- BACK-UP NOSE LANDING GEAR CONTROL, PANEL WIRING & SWITCHES, I/F BOX INSTALLATION WIRING CONCURRENT WITH BASELINE
- I/F BOX & SOFTWARE KIT REQUIRED FOR HFT – AUTO LAND ONLY
- VERTICAL FLIGHT TEST ON ORB NO. 1 – CONCURRENT WITH BASELINE FLIGHTS – DFI AVAILABLE
- NO IMPACT ON FMOF CERTIFICATION & SCHEDULES

IMPACT

- KIT INSTALLATION
- SLIGHT INCREASE IN TEST & DESIGN COST – EFFICIENCY

LEGEND

[hatched box] △ TO CONCURRENT

▽ 1ST AVIONICS HARDWARE

SUMMARY

AUTO-RETURN

CREW PROTECTION

AVIONICS HARDENING

CREW PROTECTION

OBJECTIVES

- ESTABLISH SHIELDING REQUIREMENTS TO REDUCE CREW TISSUE DOSE TO 800, 450 OR 200 RADS
- DEVELOP PERSONAL AND AREA SHIELDING CONCEPTS AT EACH RADIATION LEVEL
- DETERMINE MISSION SENSITIVITY TO RADIATION
- ESTABLISH SHIELDING WEIGHT AND COST IMPACT (PERMANENT AND KITS)

GROUND RULES

- "STS SURVIVABILITY CRITERIA" FOR REFERENCE FLUXES
- "DEXTERITY MODEL" FOR RADIATION IMPACT ON CREW
- PRR CREW COMPARTMENT CONFIGURATION
- OPTION B MISSION MODEL
- TWO, FOUR AND FIVE STATIONS SHIELDED FROM PROMPT DOSE
- NASA AND DOD USE SAME VEHICLE CONFIGURATION

STUDY APPROACH
CREW SURVIVABILITY

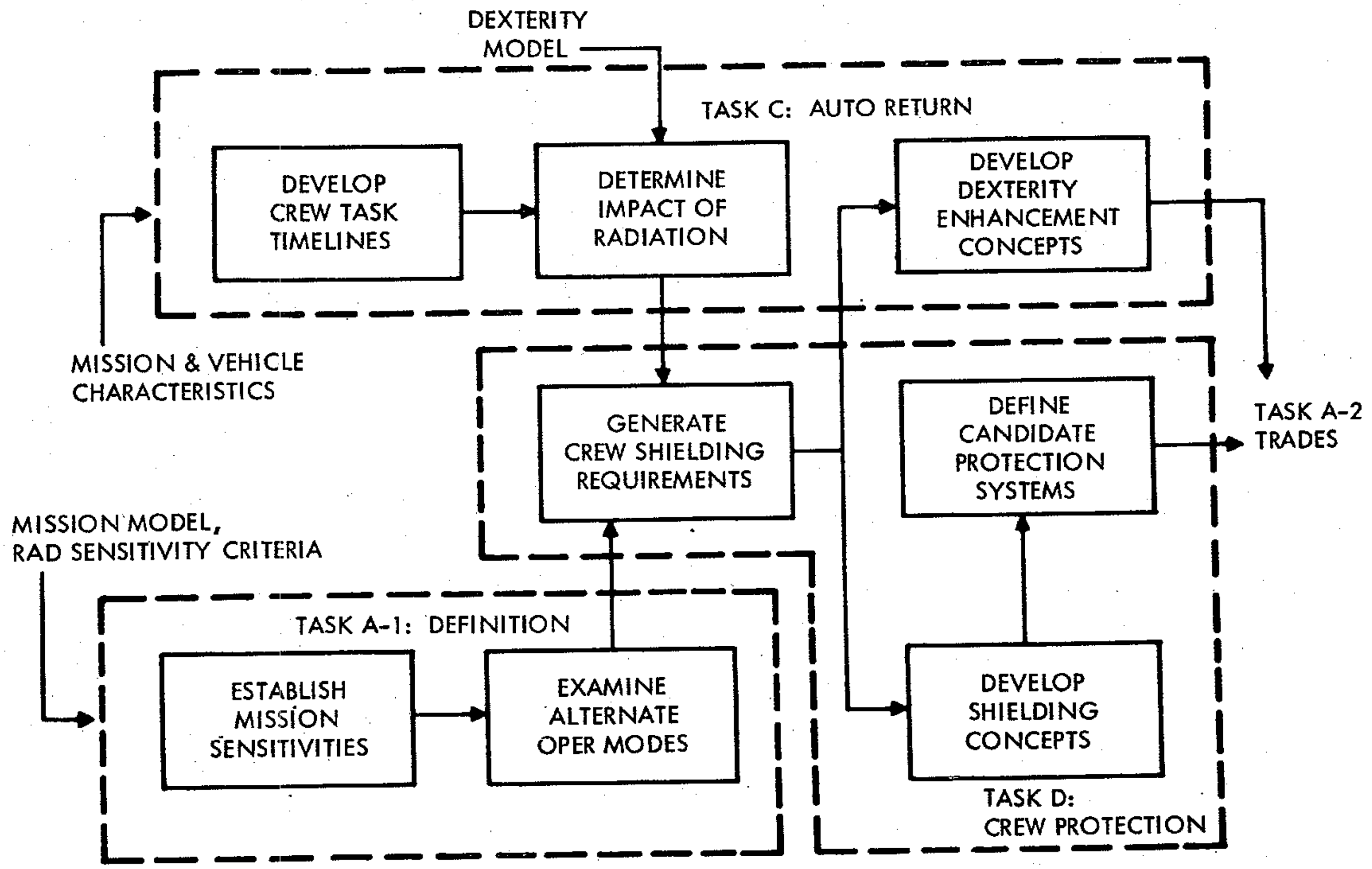

TRAPPED ELECTRON BELTS AT 100 N MI
5 MT BURST AT L 1.15

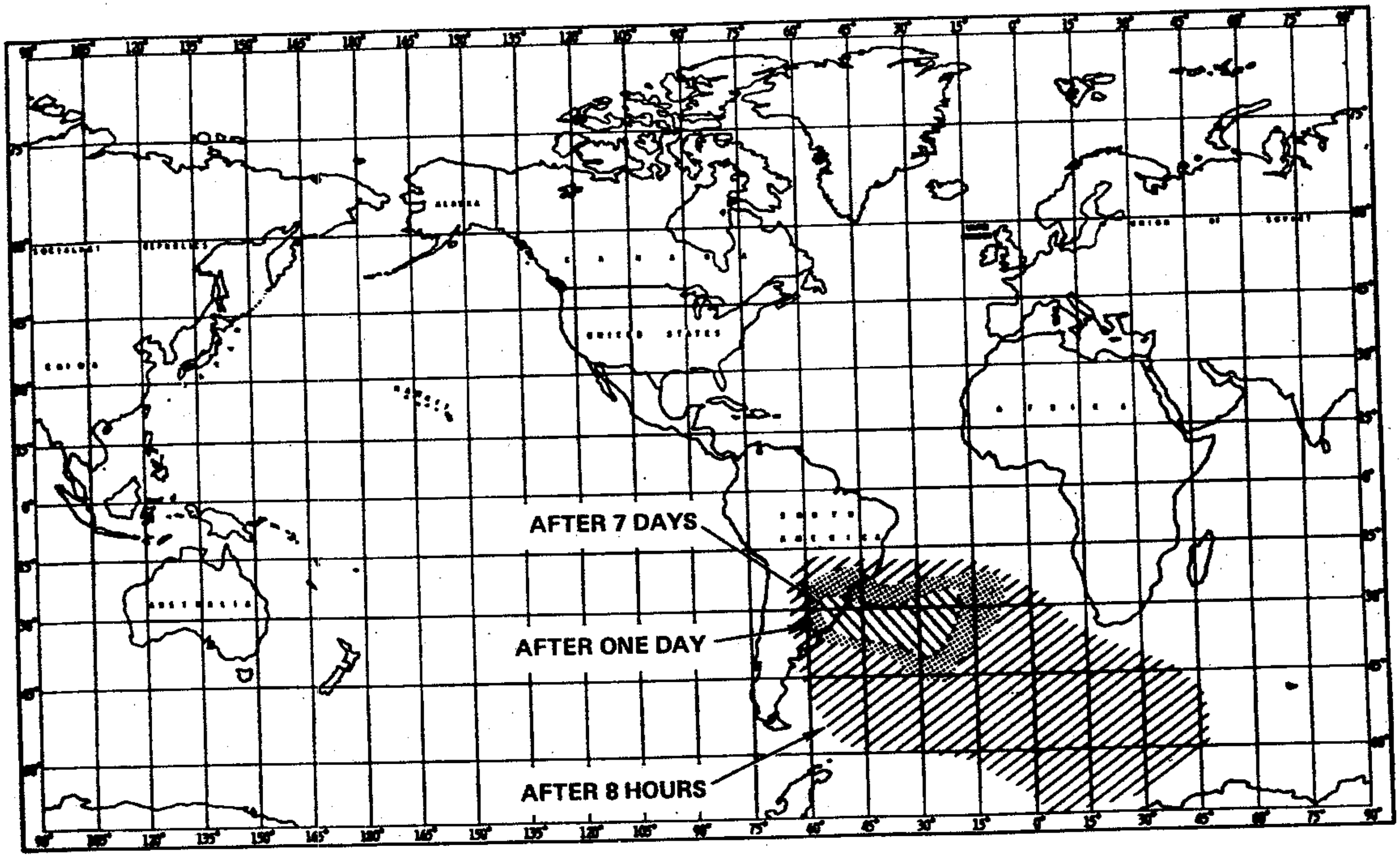

SKIN DOSE (RAD) FROM TRAPPED ELECTRONS OPTION B SHUTTLE MISSIONS

TIME FROM ONSET \ MISSION ALT (N MI) INC(°)	100 28.5	100 60	100 90	100 110	170 63.4	200 90	225 90	225 97.1
1000 SEC	17	12	9	11	28	35	45	49
1/3 DAY	97	66	52	62	160	167	226	236
2/3 DAY	121	83	66	80	208	226	305	323
1 DAY	132	94	73	90	229	250	337	347
2 DAY	149	111	87	104	271	298	382	416
7 DAY	191	156	121	149	382	416	555	590

SUGGESTED MISSION RULES

TO REDUCE ELECTRON & BREMSSTRÄHLUNG DOSE

- REDUCE MISSION ALTITUDE TO 100 N MI, OR LESS, ASAP
- CLOSE CARGO BAY DOORS WHEN PASSING THROUGH SOUTH ATLANTIC ANOMALY
- ALL CREWMEN REMAIN IN SEATS

TO REDUCE DOSE IMPACT (PRODROMAL REACTION)

- ALL CREWMEN TRAINED TO FLY ORBITER
- EACH CREWMAN EATS ONCE A DAY, CREW MEALTIMES EQUALLY SPACED
- AT LEAST ONE PILOT IN SEAT AT ALL TIMES (SEAT PROTECTION MODE)
- EMESIS COLLECTION & REMOVAL EQUIPMENT REQUIRED
- DRUGS & SALVES PROVIDED TO LESSEN EFFECT OF ERYTHEMA, EYELID SWELLING & HEADACHES
- PERSONAL DOSIMETERS (PROMPT & CUM DOSE) WORN BY CREWMEN

CREW MODULE RADIATION PROTECTION

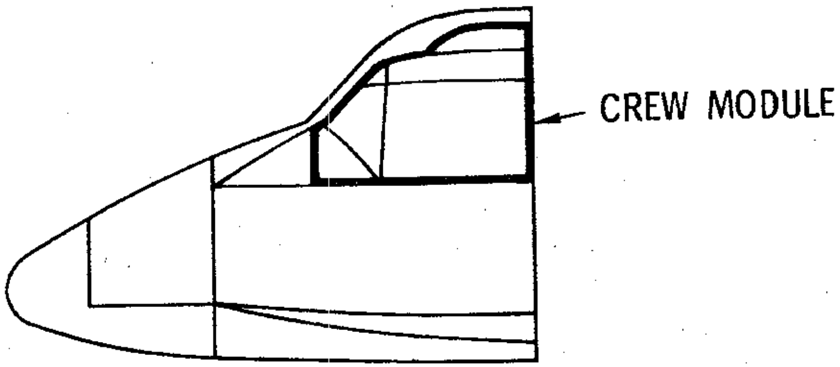

RAD LEVEL	Δ WEIGHT
800	688
450	1314
200	9946

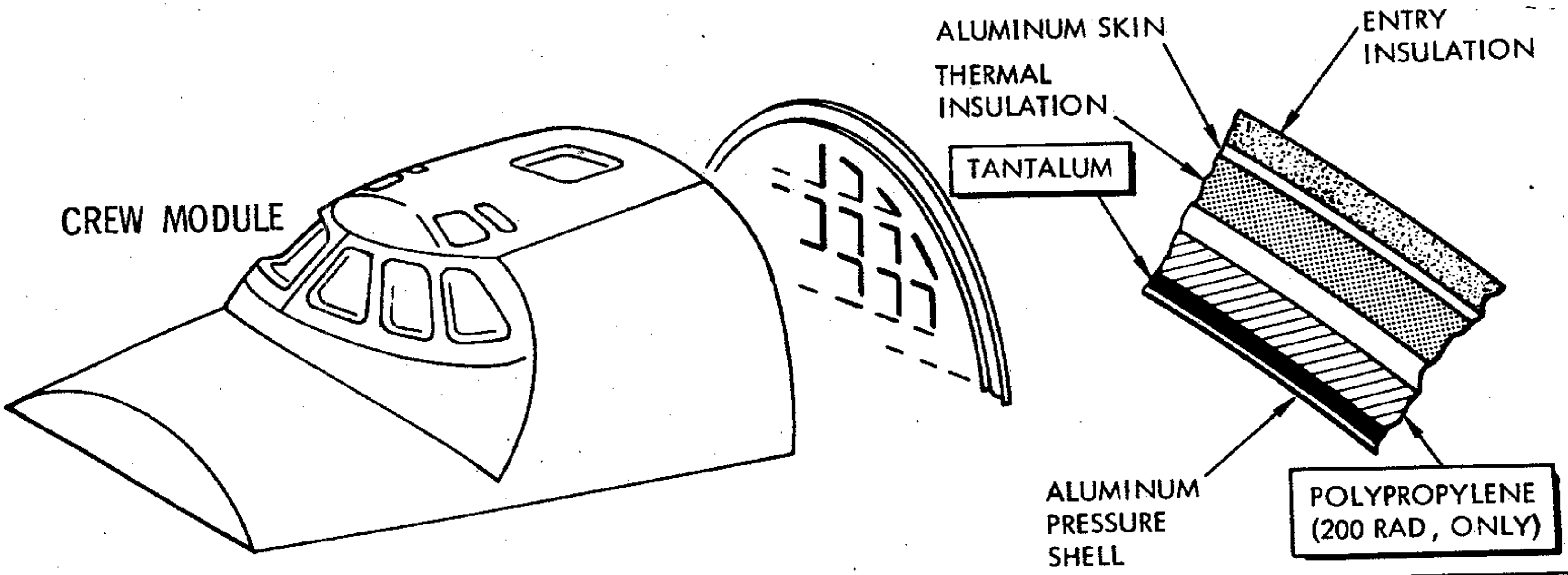

RADIATION PROTECTION SEAT

RAD	ΔWEIGHT (LB/SEAT)
800	17.5
450	35.5

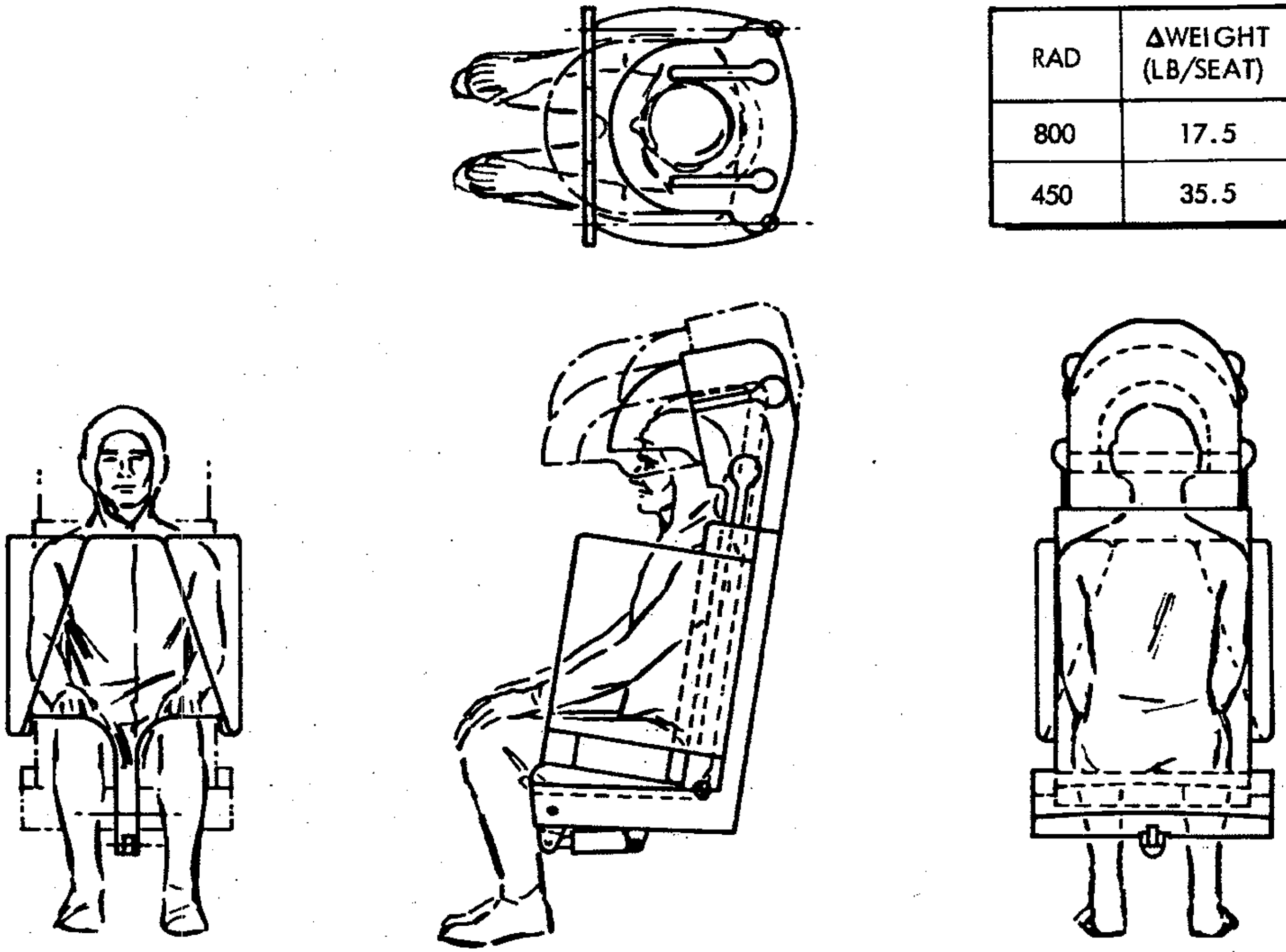

RADIATION PROTECTION SEAT

PROTECTION LEVEL: 200 RAD (TISSUE)

MATERIALS:	TANTALUM	62 LB
	WATER	185 LB
	STRUCTURE	139 LB
TOTAL (PER SEAT)		386 LB

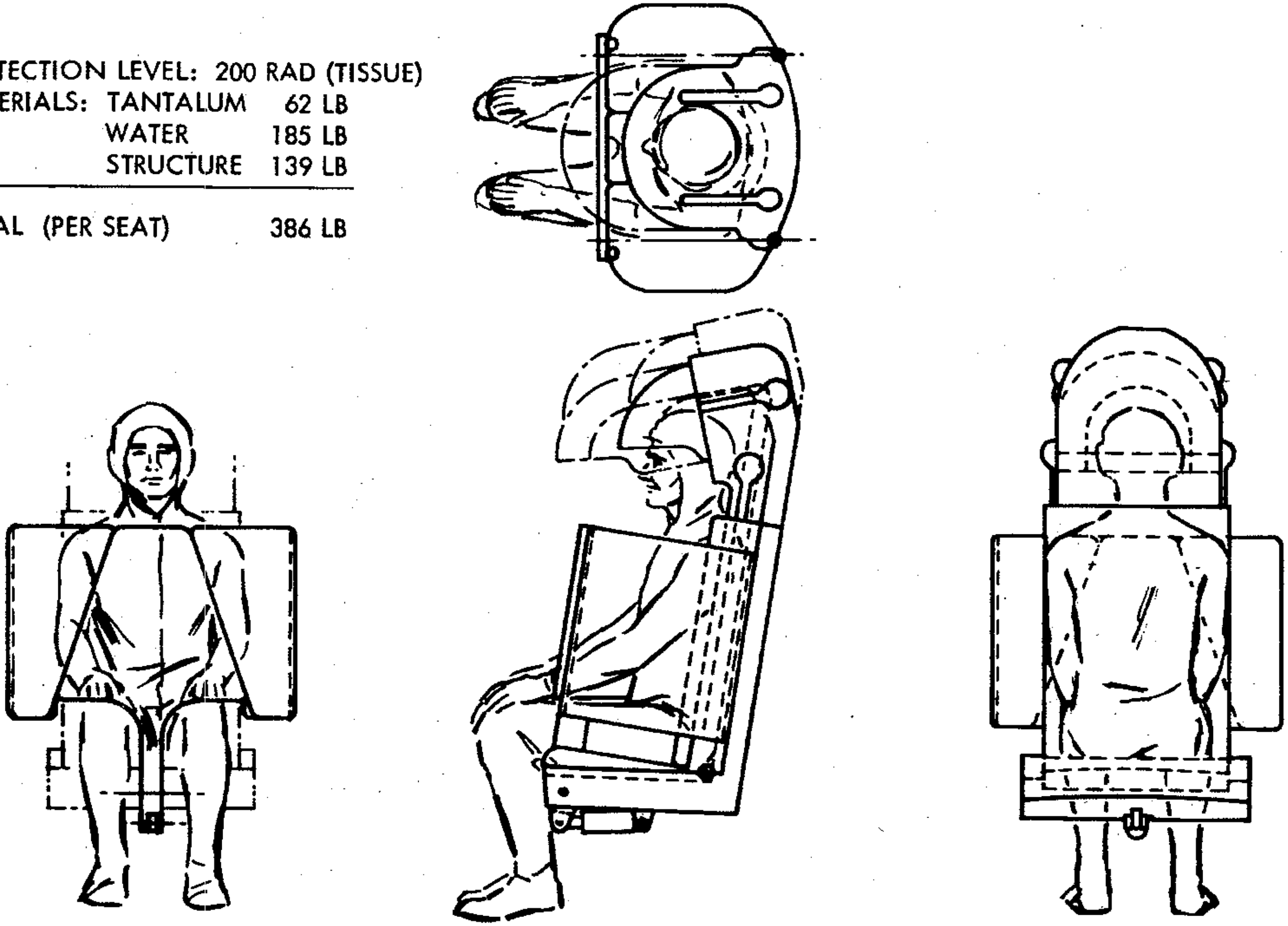

RADIATION PROTECTION MAIL SUIT

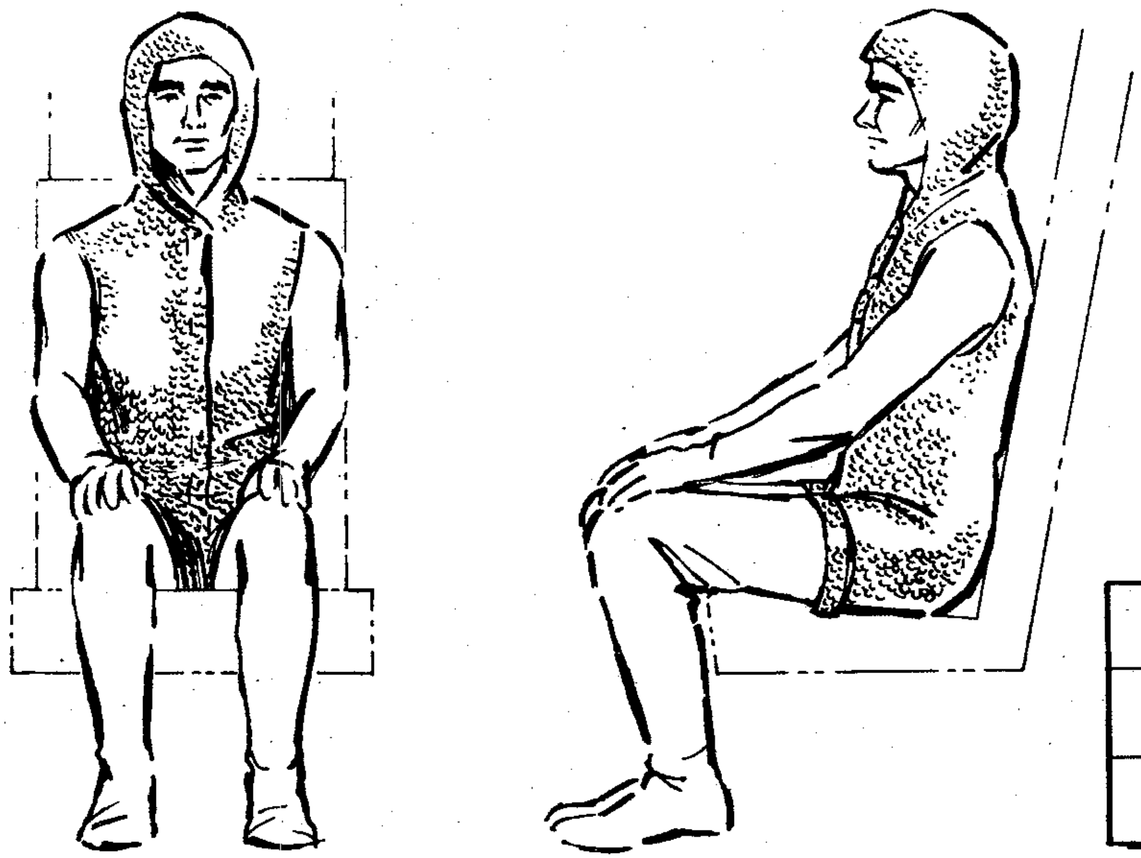

RADS	Δ WEIGHT PER MAN
800	17 LB
450	29 LB

CREW SHIELDING
WEIGHT INCREMENTS
FOUR MAN CREW

	CABIN SHIELDING			SEAT SHIELDING OR MAIL SUITS					
				800 RAD		450 RAD		200 RAD	
	800 RAD	450 RAD	200 RAD	2 MEN	4 MEN	2 MEN	4 MEN	2 MEN	4 MEN
SHIELDING & INSTALLATION WEIGHT (LB)	688	1,314	9,946	35	70	71	142	772	1,550
ORBITER DRY WEIGHT (LB)	982	1,875	14,202	50	100	101	203	1,102	2,212
ORBITER GROSS WEIGHT (LB)	1,090	2,083	15,770	58	113	114	229	1,225	2,458
SRB GROSS WEIGHT (LB)	31,021	59,282	448,814	1,651	3,216	3,245	6,517	34,864	69,955

CREW SHIELDING WEIGHT INCREMENTS THREE MAN CREW

	CABIN SHIELDING (PERMANENT)			SEAT SHIELDING OR MAIL SUITS (KITS)					
				800 RAD		450 RAD		200 RAD	
	800 RAD	450 RAD	200 RAD	2 MEN	3 MEN	2 MEN	3 MEN	2 MEN	3 MEN
SHIELDING & INSTALLATION WEIGHT (LB)	688	1,314	9,946	35	53	71	107	772	1,158
ORBITER DRY WEIGHT (LB)	982*	1,875*	14,202*	-57	-39	-21	15	802	1,354
ORBITER GROSS WEIGHT (LB)	1,090	2,083	15,770	-299	-279	-259	-218	892	1,505
SRB GROSS WEIGHT (LB)	31,021	59,282	448,814	0	0	0	0	25,387	42,832

WEIGHT OF CREWMAN & SEAT = 300 LB

*VEHICLE RESIZED TO MEET NASA REQUIREMENTS
PAYLOAD INCREASES BY 300 LB WHEN THREE MAN CREW IS USED

CREW PROTECTION COST INCREMENTS ($M)

TYPE	RADIATION LEVEL TO CREW (RADS)	DDT&E		PROD	OPS	TOTAL
		INCR 1	INCR 2			
CABIN	800	0.518	2.131	1.156	22.018	25.823
	450	0.878	3.609	1.408	41.935	47.830
	200	5.601	23.018	2.300	312.740	343.659
SEAT (4 MEN)	800	0.065	0.267	0.156	2.007	2.495
	450	0.102	0.419	0.208	4.015	4.744
	200	1.160	4.768	2.704	48.239	56.871
SEAT (3 MEN)	450 *	0.033	0.134	0.156	0.050	0.373

* NO RESIZING REQD.

CREW PROTECTION
STRUCTURAL SHIELDING SCHEDULE

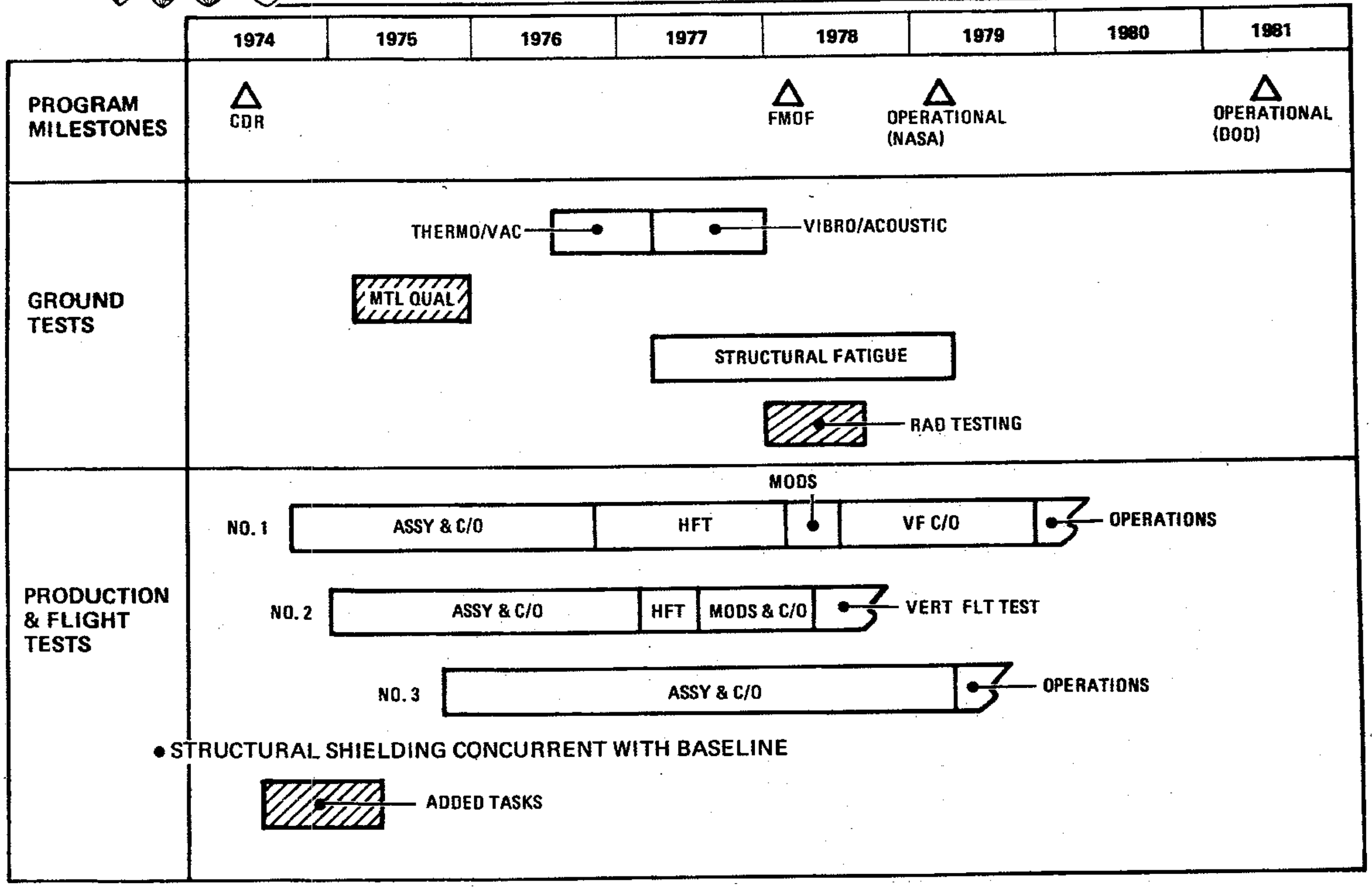

CREW PROTECTION
SHIELDED SEAT SCHEDULE

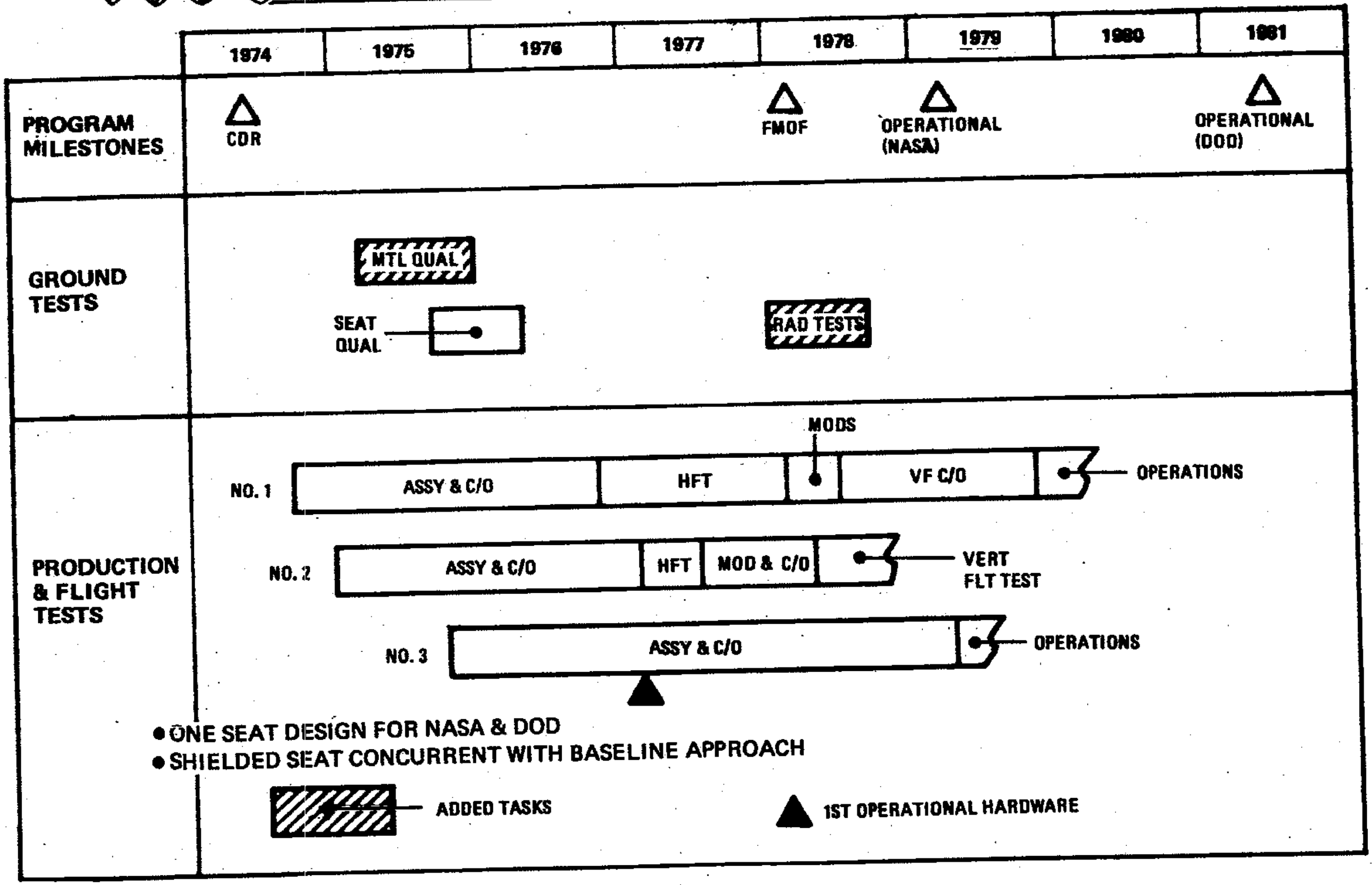

SUMMARY

AUTO-RETURN

CREW PROTECTION

AVIONICS HARDENING

TRW
SYSTEMS GROUP

OPERATIONAL REQUIREMENTS

AFTER A NUCLEAR EVENT OCCURRING AT ANY TIME BETWEEN MAIN ENGINE BURN-OUT AND LANDING, THE SYSTEM MUST:

- BE FULLY CAPABLE OF COMPLETING THE MISSION
- BE RESTORED TO THE PRE-EVENT STATE WITHOUT GROUND COMMAND OR CREW INTERVENTION, EXCEPT FOR CREW ACTIONS WHICH WOULD ROUTINELY BE PERFORMED DURING THE MISSION, DO NOT REQUIRE IMMEDIATE IMPLEMENTATION, AND WHICH DO NOT SIGNIFICANTLY INCREASE CREW WORK LOADS

TRW SYSTEMS GROUP

POTENTIAL VULNERABILITIES

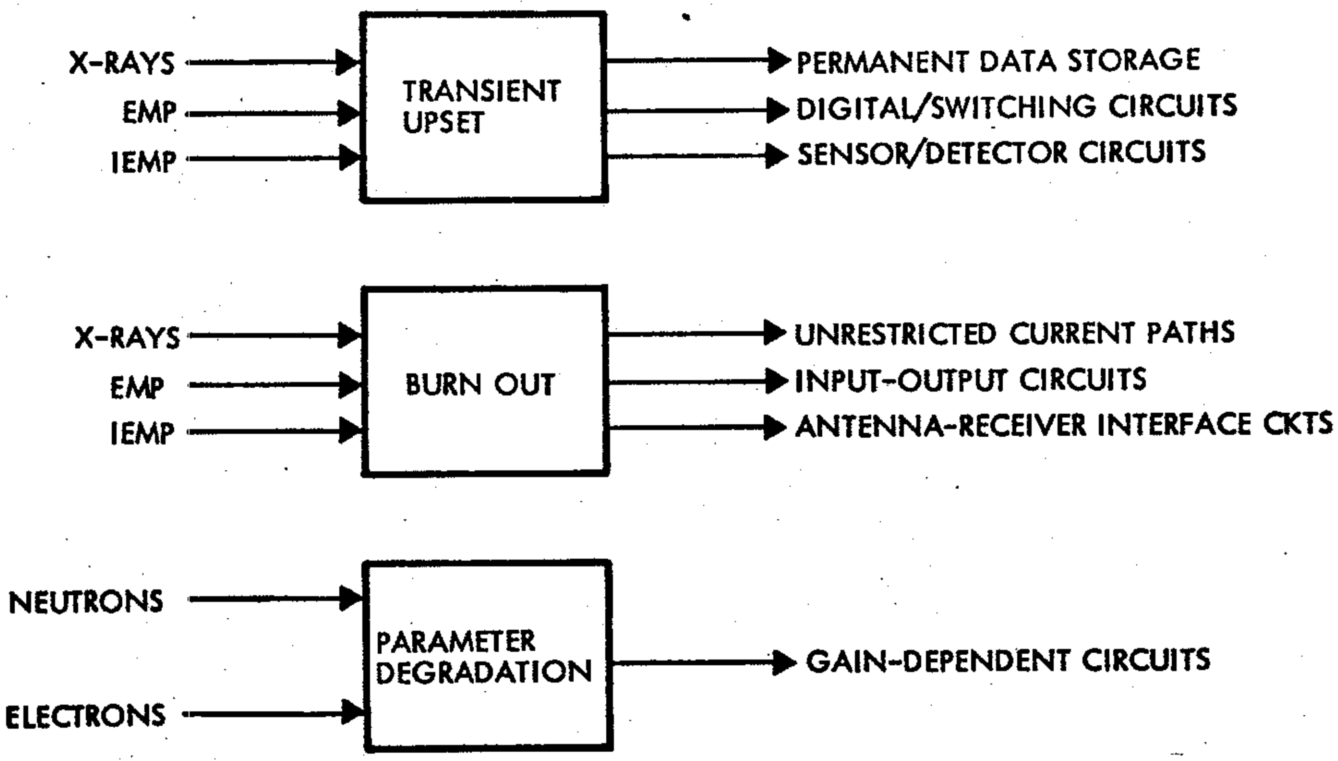

TRW
SYSTEMS GROUP

SUSCEPTIBILITY THRESHOLDS

ENVIRONMENT	EFFECT	NOMINAL THRESHOLD
EMP	UPSET BURNOUT	1 VOLT AT BOX INPUT 10 VOLTS AT BOX INPUT
PROMPT IONIZATION	UPSET LATCHUP BURNOUT	0.1 RAD (SI) 10 RAD (SI) 400 RAD (SI)
NEUTRON	PARAMETER DEGRADATION	1×10^{11} NEUTRONS/CM^2
ELECTRONS	PARAMETER DEGRADATION	5000 RAD (SI)

TRW
SYSTEMS GROUP

STS SURVIVABILITY STUDY OBJECTIVES

- DEFINE THE RADIATION ENVIRONMENT
- DETERMINE THE OPERATIONAL REQUIREMENTS DURING OR SUBSEQUENT TO EXPOSURE TO THAT ENVIRONMENT
- DEFINE THE SYSTEM VULNERABILITIES
- DEFINE AN IMPLEMENTATION PLAN FOR HARDENING THE SYSTEM
- DETERMINE A DESIGN APPROACH FOR HARDENING THE BASELINE SYSTEM
- DEFINE METHODS FOR THE VERIFICATION OF SYSTEM HARDNESS
- DETERMINE SYSTEM SURVIVABILITY COSTS

TRW
SYSTEMS GROUP

AVIONICS SURVIVABILITY STUDY PROGRAM

TRW ASSESSMENT TEAM COLOCATED AT NR CONSISTED OF VULNERABILITY AND HARDNESS SPECIALISTS PLUS SYSTEMS, SOFTWARE AND ELECTRONICS DESIGNERS DRAWN FROM TRW'S OWN SHUTTLE TEAM. THE HARDENING PROGRAM INCLUDED:

- BASELINE DESIGN DEFINITION
- HARDNESS ASSESSMENT OF BASELINE DESIGN
- DESIGN HARDENING
- DEFINITION OF PROJECTED SURVIVABILITY PROGRAM

TRW
SYSTEMS GROUP

AVIONICS SURVIVABILITY STUDY PROGRAM

DESIGN DEFINITION

- PROVIDED BY NR SUBSYSTEM ENGINEERS FROM PROPOSAL DATA, SUPPLEMENTED BY TRW-SUPPLIED QUESTIONNAIRE WHICH IDENTIFIED:
  - UNIT UTILIZATION
  - DESIGN STATUS
  - BASELINE COSTS
  - PHYSICAL DATA
  - PIECE PART COMPLEMENT
  - FUNCTIONAL DATA
  - STORED DATA

HARDNESS ASSESSMENT

- EACH OF 118 AVIONICS COMPONENTS REVIEWED FOR IMPACT OF RADIATION ENVIRONMENTS ON PERFORMANCE. WHERE SPECIFIC CIRCUIT INFORMATION WAS LACKING, MECHANIZATION OF ALL FUNCTIONS WAS POSTULATED

TRW
SYSTEMS GROUP

AVIONICS SURVIVABILITY STUDY PROGRAM

DESIGN HARDENING

- WHERE POTENTIAL VULNERABILITIES WERE DETERMINED TO EXIST, DESIGN CHANGES WERE IDENTIFIED

PROJECTED SURVIVABILITY PROGRAM

- THOSE ACTIVITIES REQUIRED TO IMPLEMENT THE HARDENED DESIGN, TOGETHER WITH THE HARDNESS VERIFICATION TASKS NECESSARY TO INSURE IT, WERE DEFINED

TRW
SYSTEMS GROUP

BASELINE DESIGN HARDENING

TRW
SYSTEMS GROUP

BASELINE DESIGN HARDENING

BURNOUT PROTECTION

PROVIDED BY:

- EMP SHIELDING - REDUCE INDUCED CURRENTS TO LIMIT BOX INPUTS TO LESS THAN 10 V.
- X-RAY SHIELDING - REDUCE DOSE LEVEL TO LESS THAN 10,000 RADS(SI).
- CIRCUIT PROTECTION - REDUCE SEMICONDUCTOR PHOTOCURRENTS TO BELOW BURNOUT LEVEL BY THE ADDITION OF LIMITING DEVICES.

TRW SYSTEMS GROUP

BASELINE DESIGN HARDENING: EMP SHIELDING

CABLING	{	DOUBLE BRAIDED SHIELD IN HIGH SKIN CURRENT AREAS SINGLE BRAIDED SHIELD ELSEWHERE EXTENDED TROUGHS AND GASKETED COVERS
INSTRUMENT PANELS	{	BONDED INSTRUMENTS TO PANELS ENCLOSED BACK SIDE OF PANELS
EQUIPMENT BAYS	{	REPLACED FIBERGLASS DOORS WITH METAL ADDED RF GASKETING

TRW
SYSTEMS GROUP

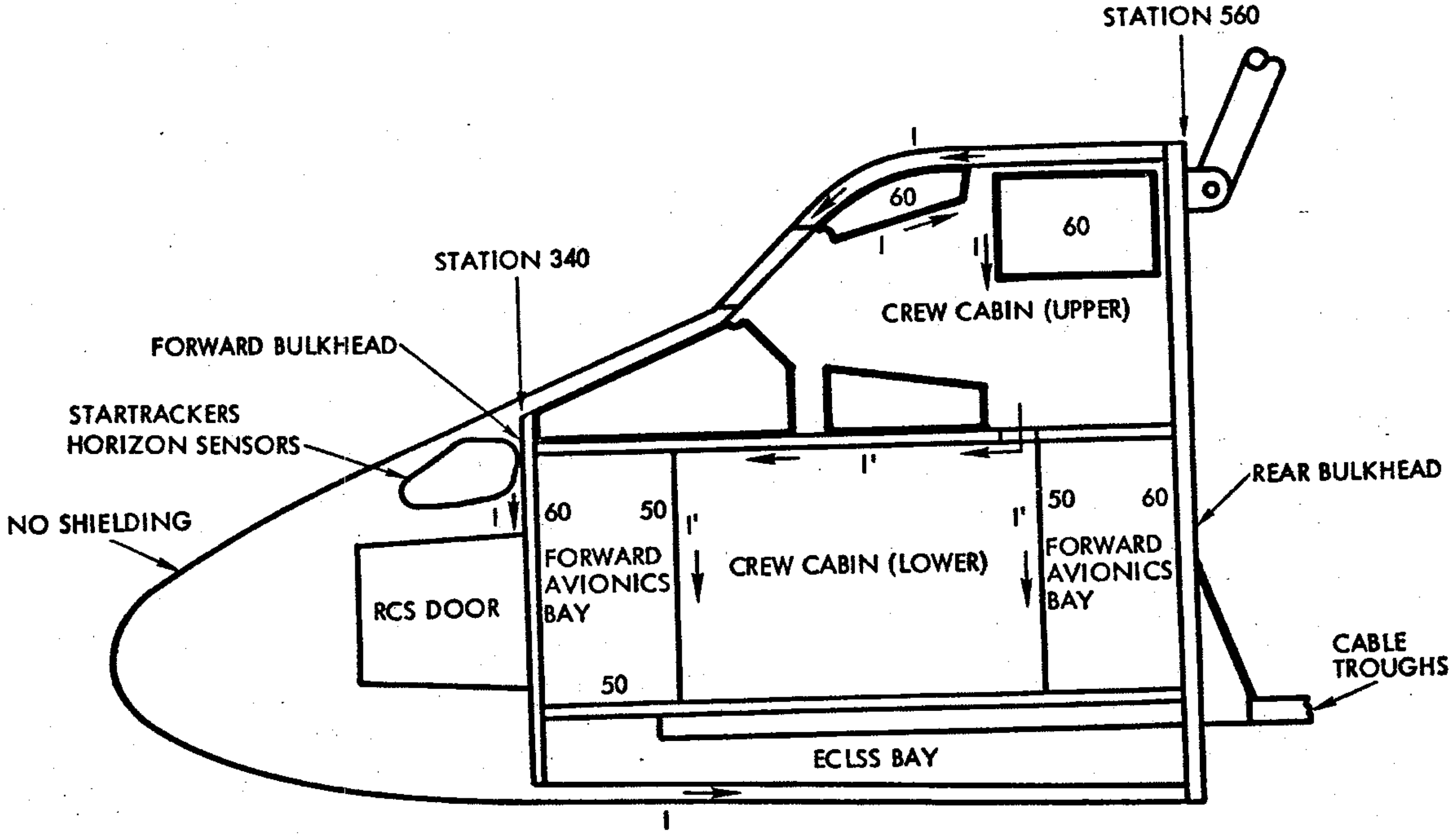

I' = 10 DB BELOW I

TRW SYSTEMS GROUP

BASELINE DESIGN HARDENING: BURNOUT CIRCUIT PROTECTION

- ALL H.U.L. ITEMS AFFECTED.

GENERAL LEVEL OF CONCERN

CIRCUIT TYPE

HIGH

- LOW IMPEDANCE - HIGH CURRENT CIRCUITS
- LINEAR I.C s
- ANTENNA LEAD INS
- DIGITAL I.C s
- OTHER LOW POWER/HIGH IMPEDANCE CIRCUITS

LOW

- SOLUTION - CIRCUIT BY CIRCUIT REVIEW - INCORPORATION OF VOLTAGE/CURRENT LIMITING DEVICES

TRW
SYSTEMS GROUP

BASELINE DESIGN HARDENING

PARAMETER DEGRADATION PROTECTION

- ALL H.U.L. ITEMS AFFECTED

GENERAL LEVEL OF CONCERN

GENERAL LEVEL OF CONCERN	CIRCUIT TYPES
HIGH	
	LOW BASE DRIVE CIRCUITS MOS CIRCUITS
	HIGH PERFORMANCE/PRECISION CIRCUITS
	OPERATIONAL AMPLIFIERS
	SERVICE REGULATORS
	LINEAR I.C s
	DIGITAL I.C s
	HIGH FREQUENCY CONSERVATIVE DESIGN
LOW	

- SOLUTION
  - o PARTS SUBSTITUTION - RAISE F_T, BETTER PASSIVATION
  - o CIRCUIT REDESIGN - GAIN MARGIN/DISTRIBUTION, RAISE BASE DRIVE

TRW
SYSTEMS GROUP

NAME: IMU WBS NO. 1.3.4.1 HUL ITEM NO. 4

NO.	FUNCTIONAL UNIT	TASK	REDESIGN COSTS
1	GIMBAL AMPLIFIER	CURRENT LIMITING - DEGRADATION	COSTS PROJECTED: ● ELEC DESIGN ● MECH DESIGN ● DRAFTING ● QA ● RELIABILITY ● PRODUCTION • PLANNING • CHECKOUT EQUIP MOD • ADDITIONAL COMPLEXITY ● QUALIFICATION TEST
2	ACCEL. RESTORING AMPLIFIER	CURRENT LIMITING - DEGRADATION	
3	RESOLVER DIGITIZER	CYCLICLY RESET - ASSUME DOWN-STREAM CLAMP	
4	GYRO SPIN SUPPLY	ADD CURRENT LIMITING	
5	RESOLVER EXCITATION SUPPLY	ADD CURRENT LIMITING	
6	D.C. POWER SUPPLY	CURRENT LIMIT - VOLTAGE CLAMP - DEGRADATION	
7	MODE SELECTOR	POWER INTERRUPT - COMPUTER RECONFIGURE	
8	ACCELEROMETER DIGITIZER	CYCLICLY RESET - ASSUME DOWN-STREAM CLAMP	
9	TEMP CONTROLLER	DEGRADATION - CURRENT LIMITING	

BASELINE DESIGN HARDENING: TRANSIENT UPSET

UNHARDENED DESIGN

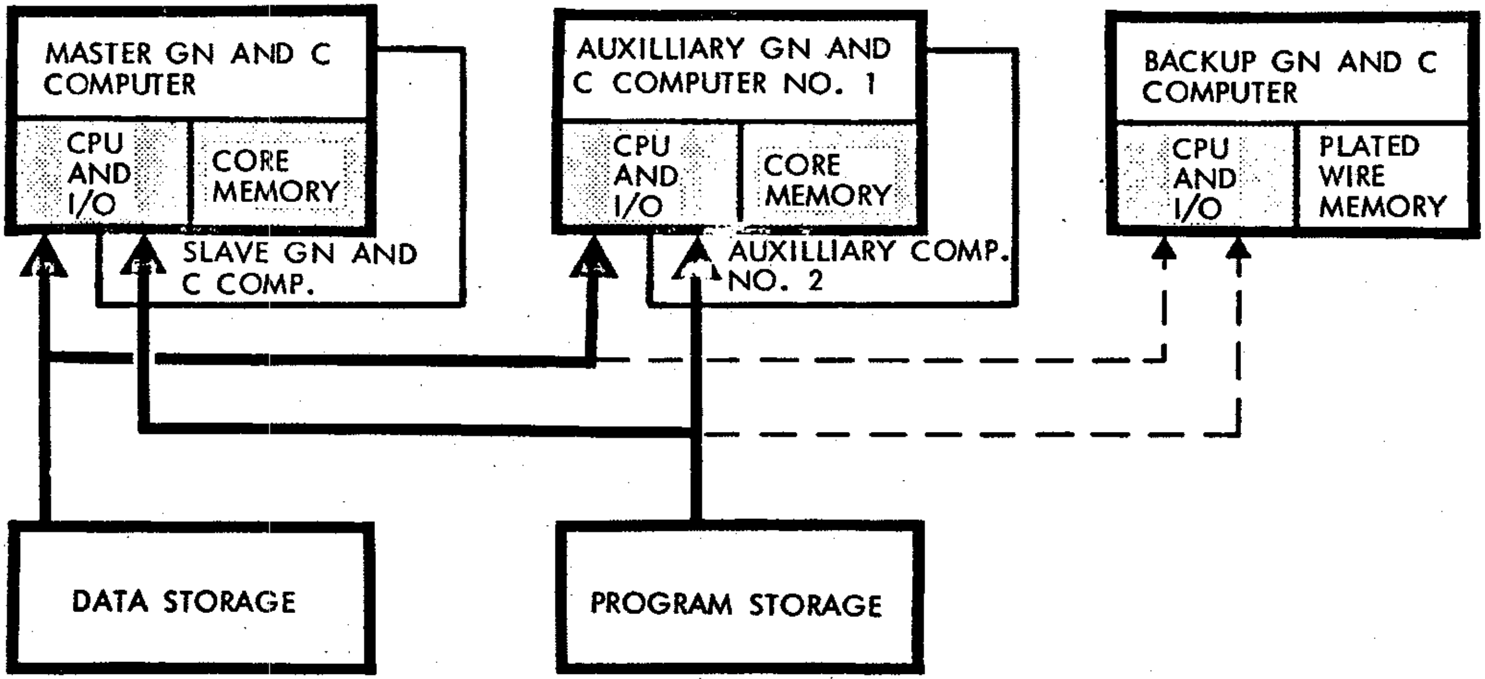

PRINCIPAL VULNERABILITY: DRO CORE MEMORY OF OPERATING COMPUTER(S) LOSES INFORMATION FROM UNKNOWN LOCATION.

TRW
SYSTEMS GROUP

BASELINE DESIGN HARDENING: TRANSIENT UPSET

UNHARDENED DESIGN

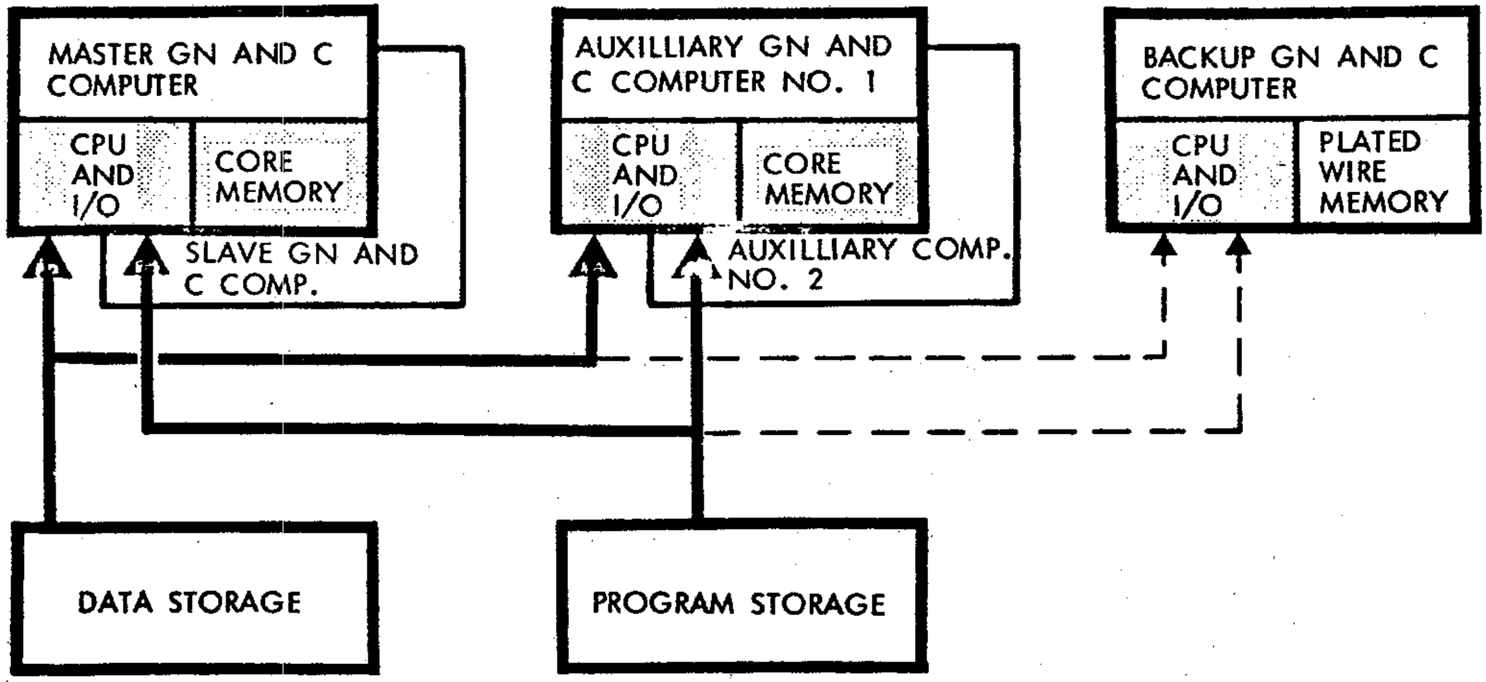

PRINCIPAL VULNERABILITY: DRO CORE MEMORY OF OPERATING COMPUTER(S) LOSES INFORMATION FROM UNKNOWN LOCATION.

TRW SYSTEMS GROUP

BASELINE DESIGN HARDENING: TRANSIENT UPSET

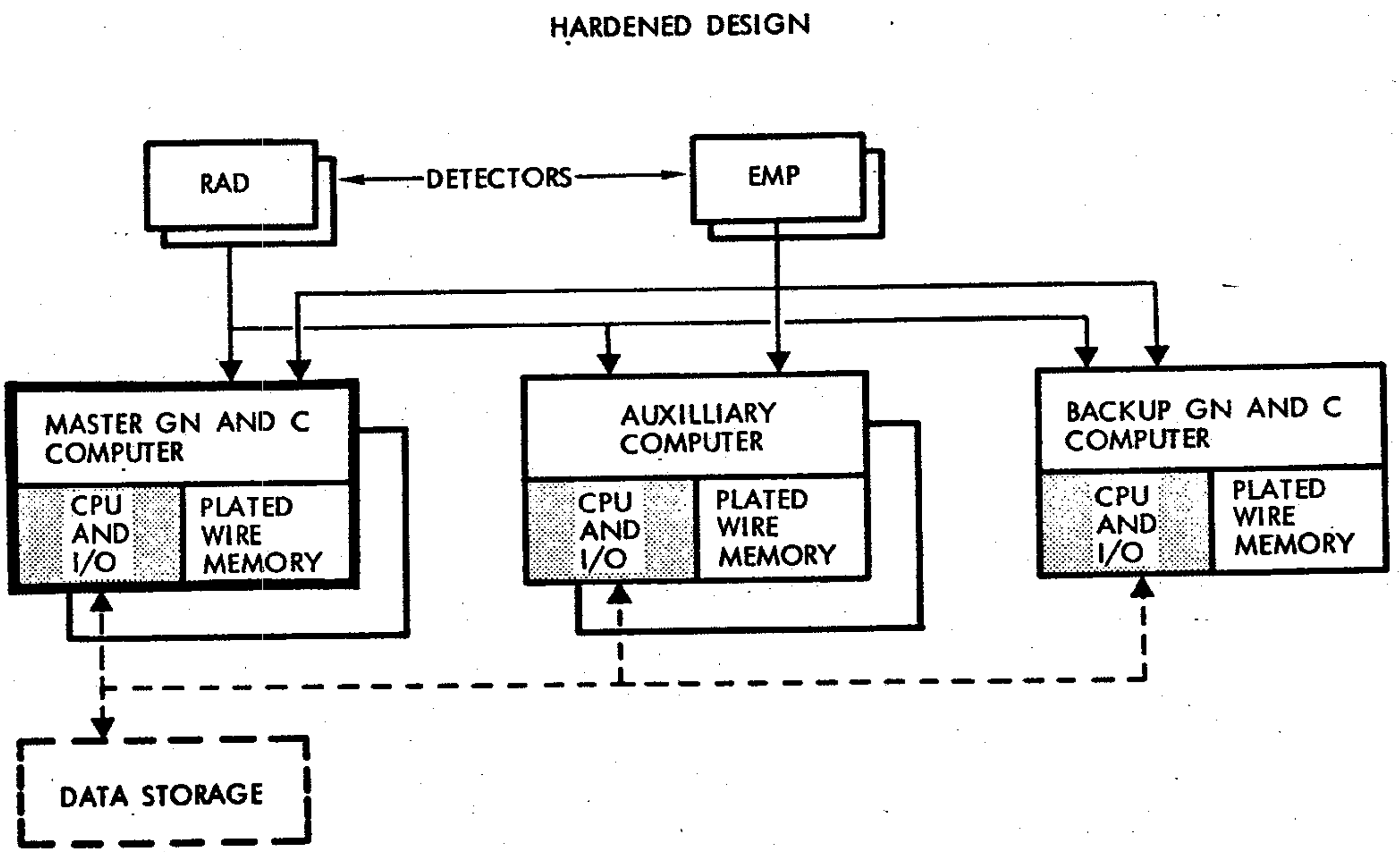

PLATED WIRE MEMORY RETAINS INFORMATION

RADIATION AND EMP DETECTORS PROVIDE CIRCUMVENTION SIGNAL

SOFTWARE CHANGES ENABLE SYSTEM RECONFIGURATION

TRW
SYSTEMS GROUP

BASELINE DESIGN HARDENING APPROACH – TRANSIENT UPSET COMPUTER (CONT'D)

- HARDWARE
  - DETECTOR SIGNAL USED TO
    - INHIBIT WRITE
    - GENERATE PROGRAM INTERRUPT
- SOFTWARE
  - ORGANIZATION
    - SOFTWARE MUST COMPLEMENT HARDWARE
    - SYSTEM RECOVERY ASSURED BY IMPLEMENTING SOFTWARE RULES
  - MEMORY PROTECTION
    - STORE CRITICAL VARIABLES IN EACH OF TWO LISTS
    - USE "LIST-LOCK" AND POINTER TO IDENTIFY VALID LIST
  - CIRCUMVENTION
    - INTERRUPT PROCESSING SUBROUTINE REINITIALIZES COMPUTER
  - RECONFIGURATION
    - COMPUTER ISSUES COMMANDS TO RESET OTHER LOGIC

TRW SYSTEMS GROUP

BASELINE DESIGN HARDENING APPROACH - TRANSIENT UPSET (CONT'D)

- SYSTEM
  - OPERATING MODE OF ALL SUBSYSTEMS IS CONTROLLED BY
    - POWER APPLICATION
    - CREW ACTION
    - COMPUTERS
  - PROMPT IONIZING RADIATION MAY SET SUBSYSTEM LOGIC TO MODES WHICH ARE
    - MISSION CRITICAL e.g. ORDNANCE
    - TIME CRITICAL e.g. CONTROL SYSTEMS
    - IMPROPER e.g. TACAN
    - ABNORMAL (NOT OTHERWISE POSSIBLE)
  - DETECTOR/COMPUTER IN CONSORT MUST PROVIDE NECESSARY
    - INHIBIT COMMANDS
    - POWER INTERRUPT (& POSSIBLY SEQUENCING) COMMANDS

    AND/OR

    - ADDITIONAL MODE CONTROL

    AS WELL AS

    - NORMAL MODE CONTROL SIGNALS

TRW
SYSTEMS GROUP

PROJECTED PROGRAM

- VERIFICATION TASK DESCRIPTIONS
- COSTS
- CONFIDENCE

TRW
SYSTEMS GROUP

HARDENING PROGRAM IMPLEMENTATION

APPROACH

- SURVIVABILITY PROGRAM PLAN BY NR DEFINES HARDENING DESIGN, ANALYSIS AND TEST TASKS. NASA/USAF APPROVES PLAN
- NR DIRECTS HARDWARE SUPPLIERS AND SURVIVABILITY SPECIALISTS IN IMPLEMENTING HARDENED DESIGN IN ACCORDANCE WITH APPROVED PLAN
- RESULTS OF VERIFICATION ANALYSES AND TESTS ARE REPORTED TO NASA/USAF WHICH DIRECTS DISPOSITION OF ANY REMAINING VULNERABILITIES

TRW SYSTEMS GROUP

HARDENING PROGRAM IMPLEMENTATION

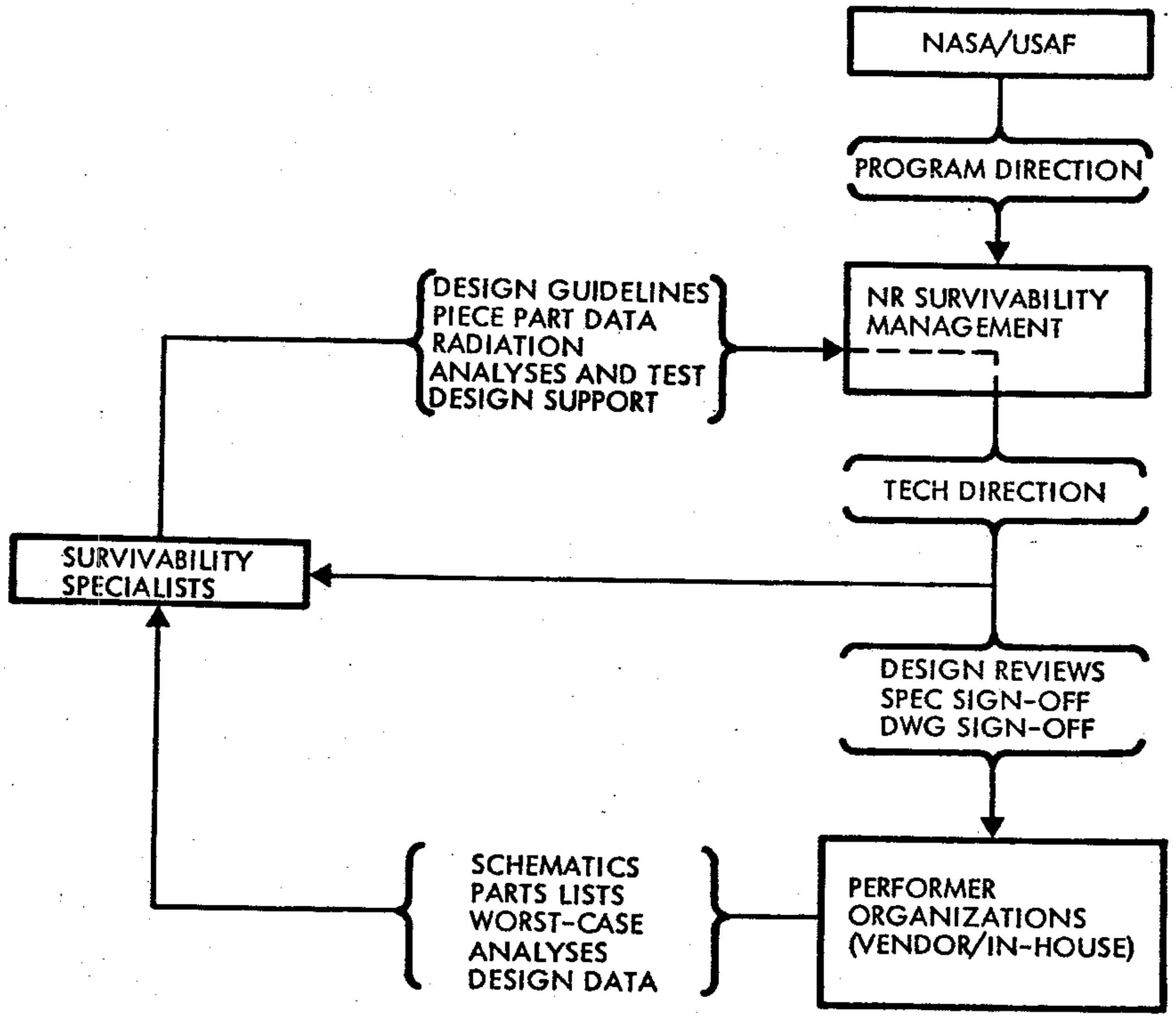

TRW
SYSTEMS GROUP

HARDNESS VERIFICATION: SYSTEM FUNCTIONAL ANALYSIS

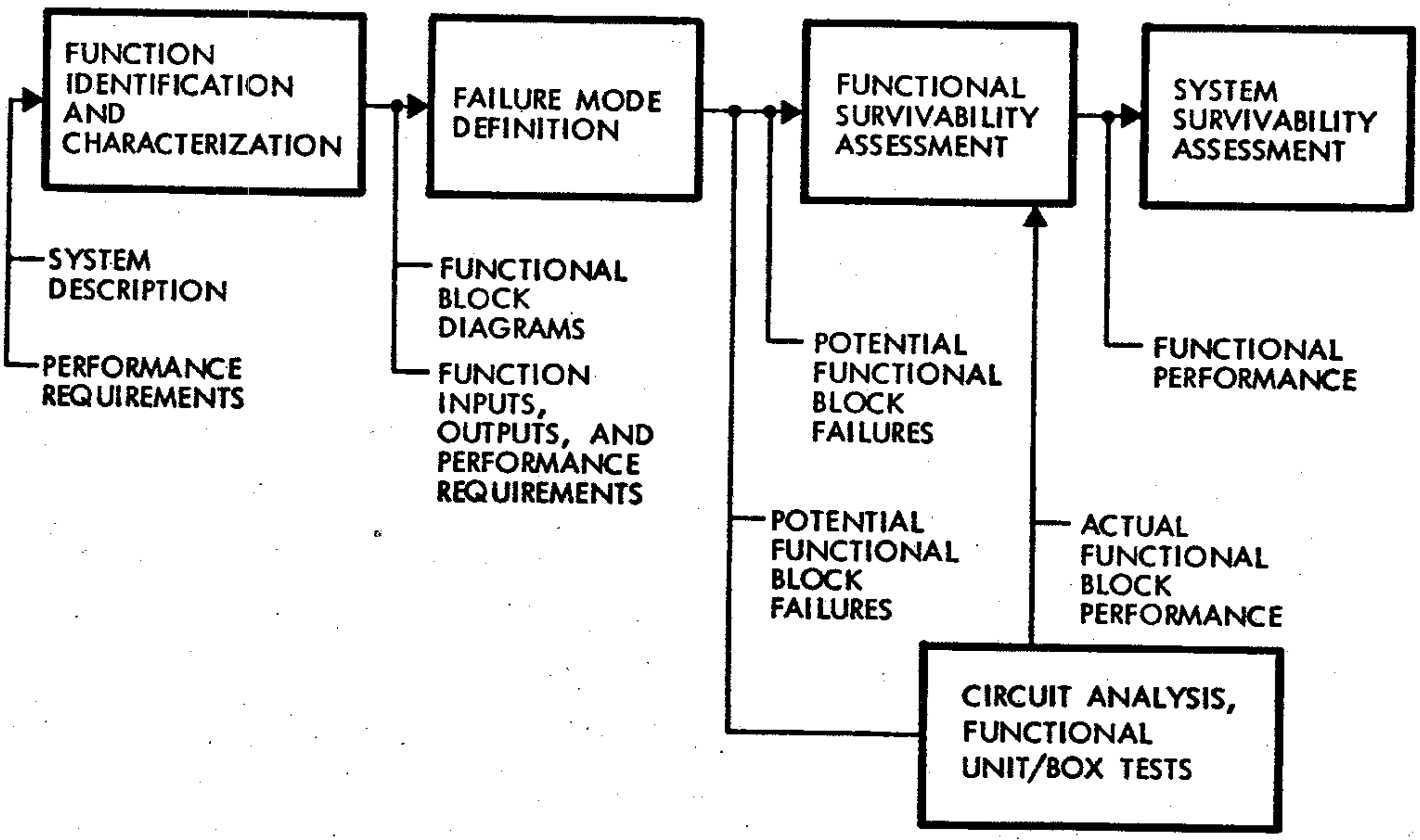

TRW
SYSTEMS GROUP

HARDNESS VERIFICATION: RADIATION CIRCUIT ANALYSIS

- ADDRESSES CRITICAL CIRCUITS DEFINED BY SYSTEM FUNCTIONAL ANALYSIS
- BURNOUT ANALYSIS
  - LOCATE ALL UNRESTRICTED CURRENT PATHS
  - DEFINE OVERVOLTAGE CONDITIONS PRODUCED BY EMP, RADIATION
  - DETERMINE WHERE PARTS ARE OVERSTRESSED
- TRANSIENT ANALYSIS
  - DETERMINE WHICH TRANSIENT UPSETS RESULT IN SYSTEM FAILURE
  - DEFINE CORRECTIVE ACTIONS FOR FAILURES
  - ESTABLISH CIRCUIT IONIZATION, EMP THRESHOLDS
- DEGRADATION ANALYSIS
  - PERFORM "WORST CASE" ANALYSIS BASED ON COMBINED TEMPERATURE, AGING, NEUTRONS, TOTAL DOSE
- RECOMMEND DESIGN CHANGES

TRW
SYSTEMS GROUP

HARDNESS VERIFICATION: IEMP ANALYSIS

- DETERMINE ENVIRONMENT: E AND H FIELDS IN CAVITIES
- CALCULATE CABLE CURRENTS: FROM FIELD COUPLING AND DIRECT IRRADIATION
- DETERMINE RESPONSE: IEMP INPUTS TO CIRCUIT AND BOX ANALYTICAL MODELS USED FOR RADIATION/EMP ANALYSIS
- CABLE RESPONSE VERIFICATION: TEST IN DENSE PLASMA FOCUS FACILITY
- DESIGN RECOMMENDATIONS: MATERIALS CHANGES (PAINTS, SURFACE COATINGS) CABLE CONFIGURATION

TRW
SYSTEMS GROUP

HARDNESS VERIFICATION: BOX/FUNCTIONAL UNIT TESTS

- o FUNCTIONAL UNIT TESTS
  - USE REACTOR, FXR, CO^{60}, DIRECT DRIVE FACILITIES
  - PROVIDES DESIGN/DEVELOPMENT SUPPORT DATA
  - MAY BE AT CIRCUIT, BOX, OR MULTI-BOX LEVEL
  - TEST ENVIRONMENT LEVELS – BELOW TO ABOVE THREAT LEVEIS
- o BOX TESTS – AURORA FACILITY
  - ALL ELECTRONICS BOXES TESTED
  - MAXIMUM MACHINE CAPABILITY – ~ 40K RAD (SI)
  - PURPOSE – HARDNESS VERIFICATION

TRW
SYSTEMS GROUP

HARDNESS VERIFICATION: PIECE PART TESTS

- LATCH UP SCREEN
  - ALL JUNCTION ISOLATED INTEGRATED CIRCUITS SCREENED IN FXR ENVIRONMENT
- BOND PULL SCREEN
  - ALL INTEGRATED CIRCUITS SCREENED IN BOND PULL EQUIPMENT
- SEMICONDUCTOR PIECE PARTS
  - FIVE SAMPLES OF EACH PART TYPE, BY VENDOR, WILL BE TESTED IN A TRANSIENT IONIZATION, STEADY STATE IONIZATION, AND NEUTRON ENVIRONMENT

TRW
SYSTEMS GROUP

HARDNESS VERIFICATION: EMP TESTS

- o DEVELOPMENT TESTING
  - DIRECT DRIVE THRESHOLD TESTS - SENSITIVE ELECTRONICS
  - COUPLING TESTS - ACTUATORS, ANTENNAS, ETC.
  - PENETRATIONS TESTS - E.G., WINDSHIELD
- o PRODUCTION TESTING
  - SHIELDING EFFECTIVENESS TESTS
    - ALL CABLES AND TROUGHS
    - AVIONICS BAYS
- o VERIFICATION TEST
  - SYSTEMS LEVEL TEST - 10X CRITERIA
    - ORIENTATIONS - FUSELAGE, WING, BOOM AXES
    - INSTRUMENTATION
      - PERFORMANCE MONITORING
      - RESPONSE MONITORING
    - AVAILABILITY - SIMULATOR AND ORBITER
    - DURATION - 4 MONTHS

TRW
SYSTEMS GROUP

COSTING ASSUMPTIONS

- o VENDOR COSTS DETERMINED WITHIN A COMPETITIVE CLIMATE
  - RFP REQUIREMENT
  - TASK DESCRIPTION IN S.O.W.
  - SEPARATE COST FOR SURVIVABILITY TASKS
- o VENDOR REQUIRED TO PERFORM SURVIVABILITY TASKS
  - SATISFY DESIGN GUIDELINE REQUIREMENTS
  - SUPPORT RADIATION TESTS
  - PROVIDE DESIGN DETAILS
- o CENTRALIZED SURVIVABILITY ORGANIZATION
  - PERFORM PROGRAM LEVEL TASKS
  - SIGNOFF AUTHORITY

TRW
SYSTEMS GROUP

SUBSYSTEM COSTS
($ IN THOUSANDS)

THREAT	TRANSIENT	EMP	BURN OUT	DEGRADATION
COST	39,617.7	2,324.0	3,789.5	3,010.1

DESIGN	$17,521.0
MANUFACTURE	$21,169.6
VERIFICATION ANALYSIS	$ 1,197.4
VERIFICATION TEST	$ 7,477.8
FACILITIES	$ 1,375.5
TOTAL	$48,741.3

TRW
SYSTEMS GROUP

SUBSYSTEM COST ANALYSIS

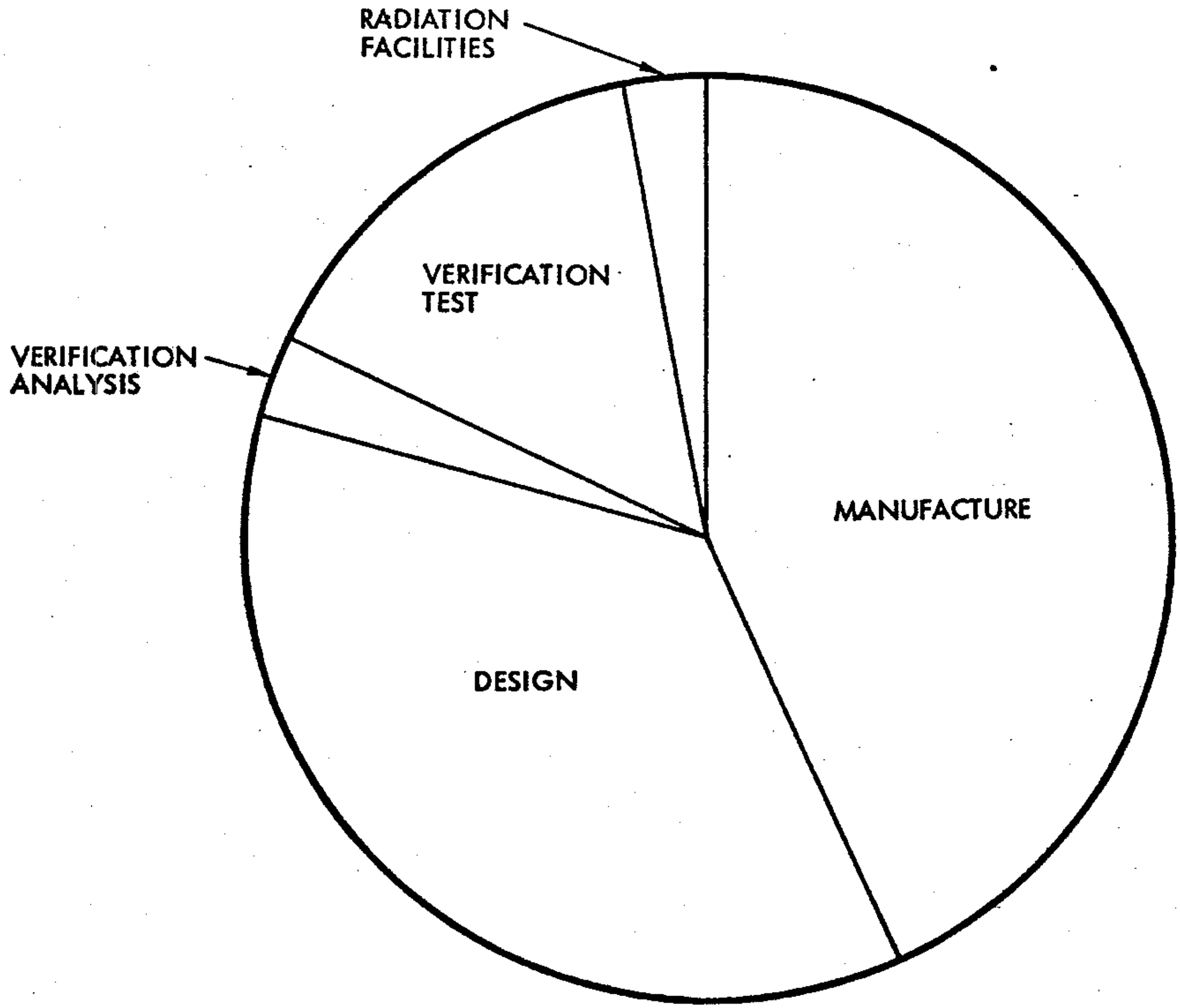

TRW
SYSTEMS GROUP

SYSTEM COSTS
($ IN THOUSANDS)

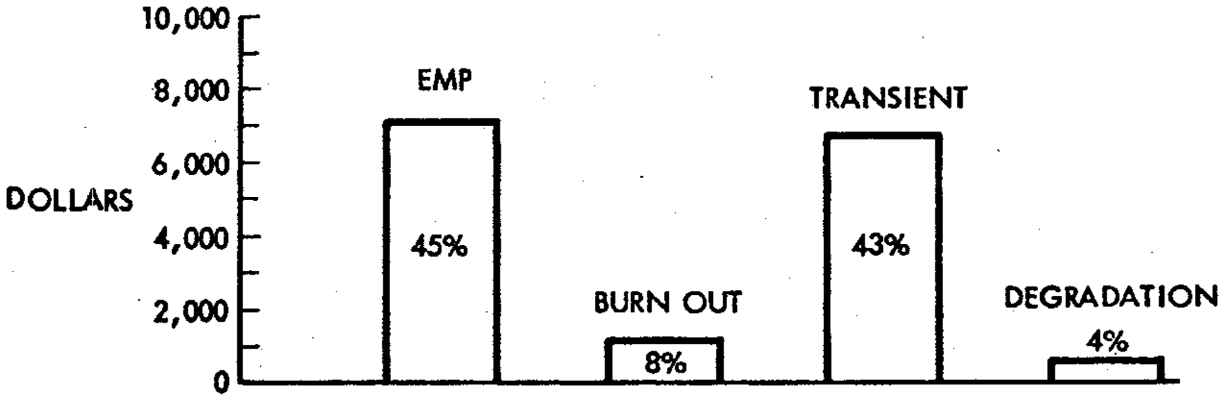

DESIGN	$ 419.1
MANUFACTURE	$ 9,927.6
VERIFICATION ANALYSIS	$ 2,670.9
VERIFICATION TEST	$ 2,466.4
FACILITIES	$ 300.2
TOTAL	$15,784.2

TRW SYSTEMS GROUP

SYSTEM COSTS ANALYSIS

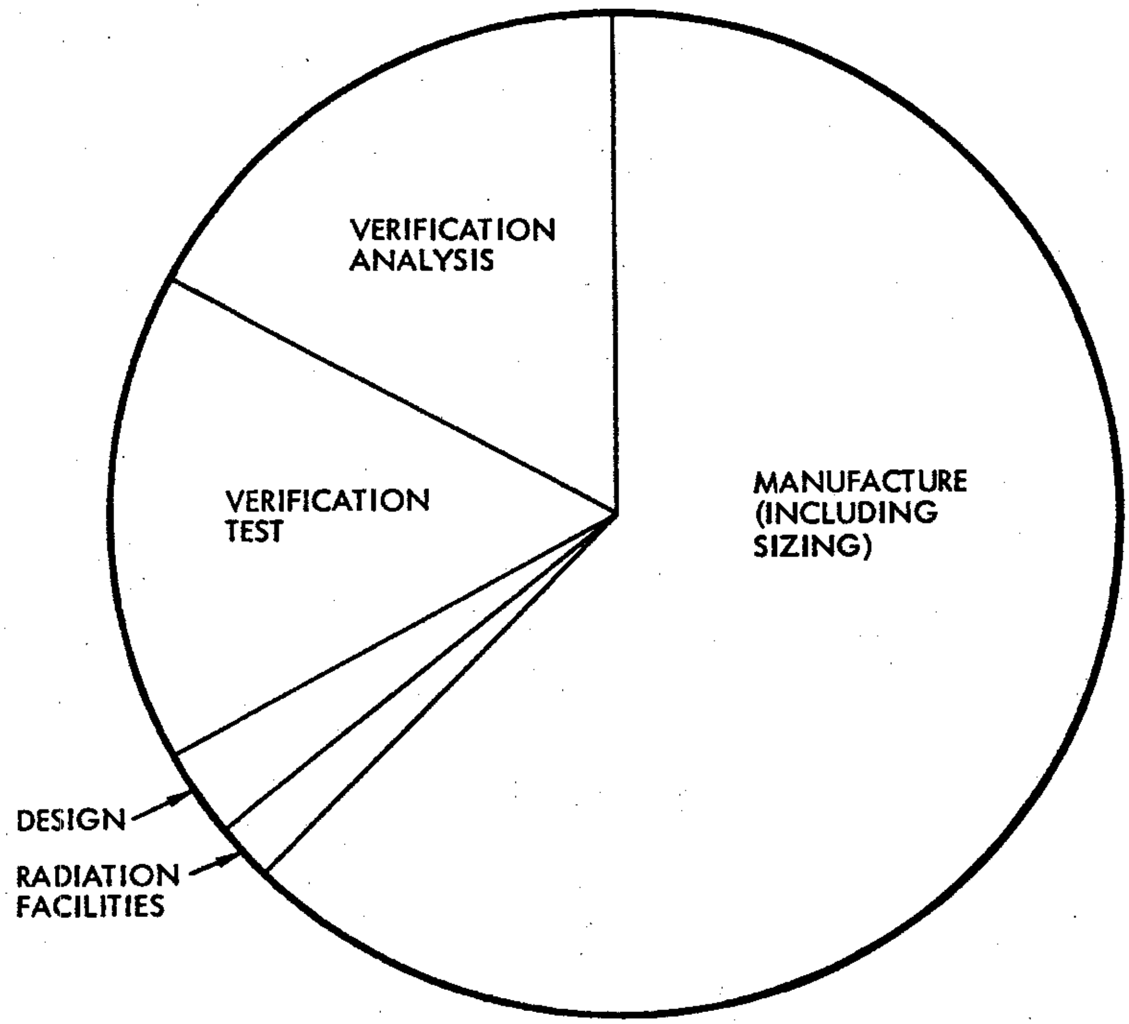

TRW
SYSTEMS GROUP

TOTAL COST ANALYSIS
(DOLLARS IN THOUSANDS)

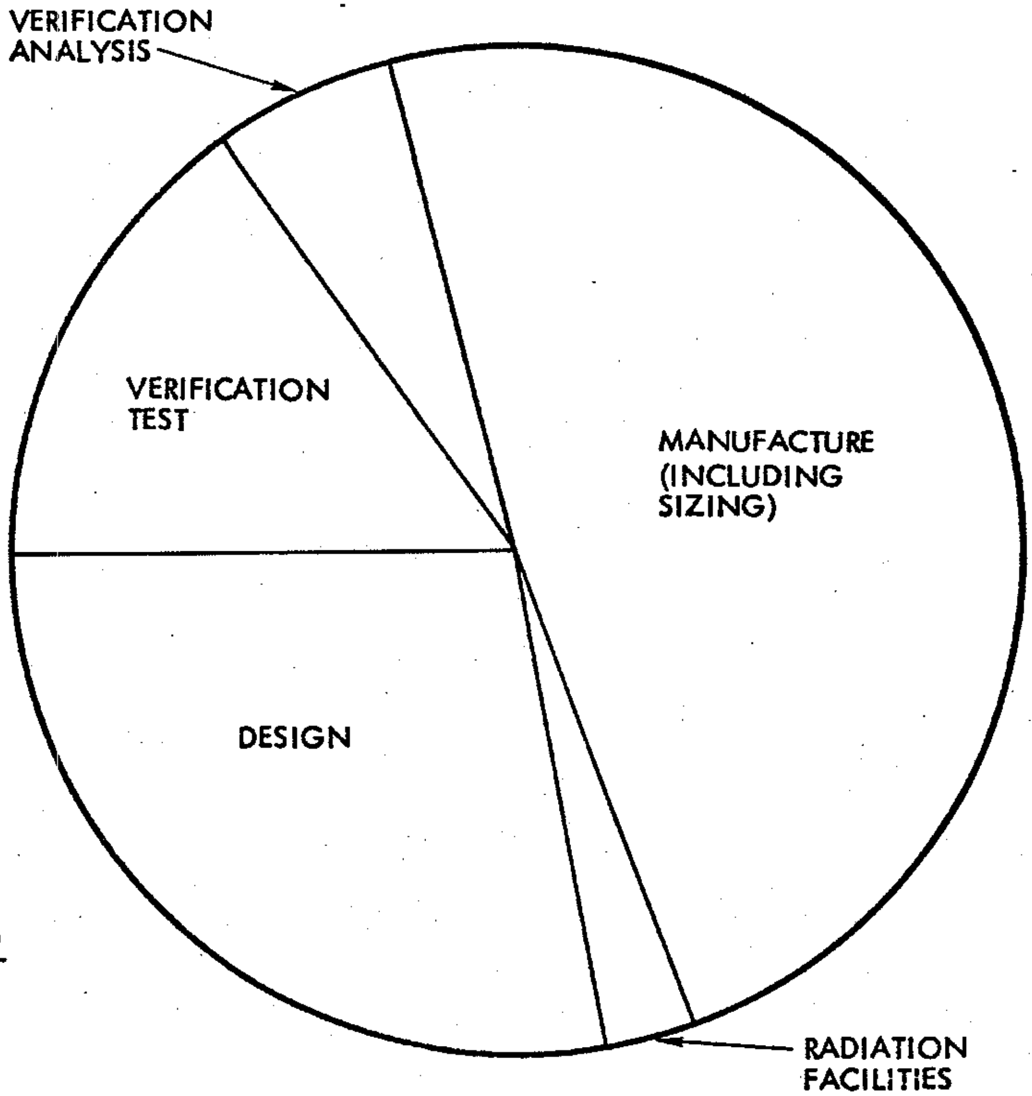

$ 64,525.5

AVIONICS SYSTEM CONFIGURATION

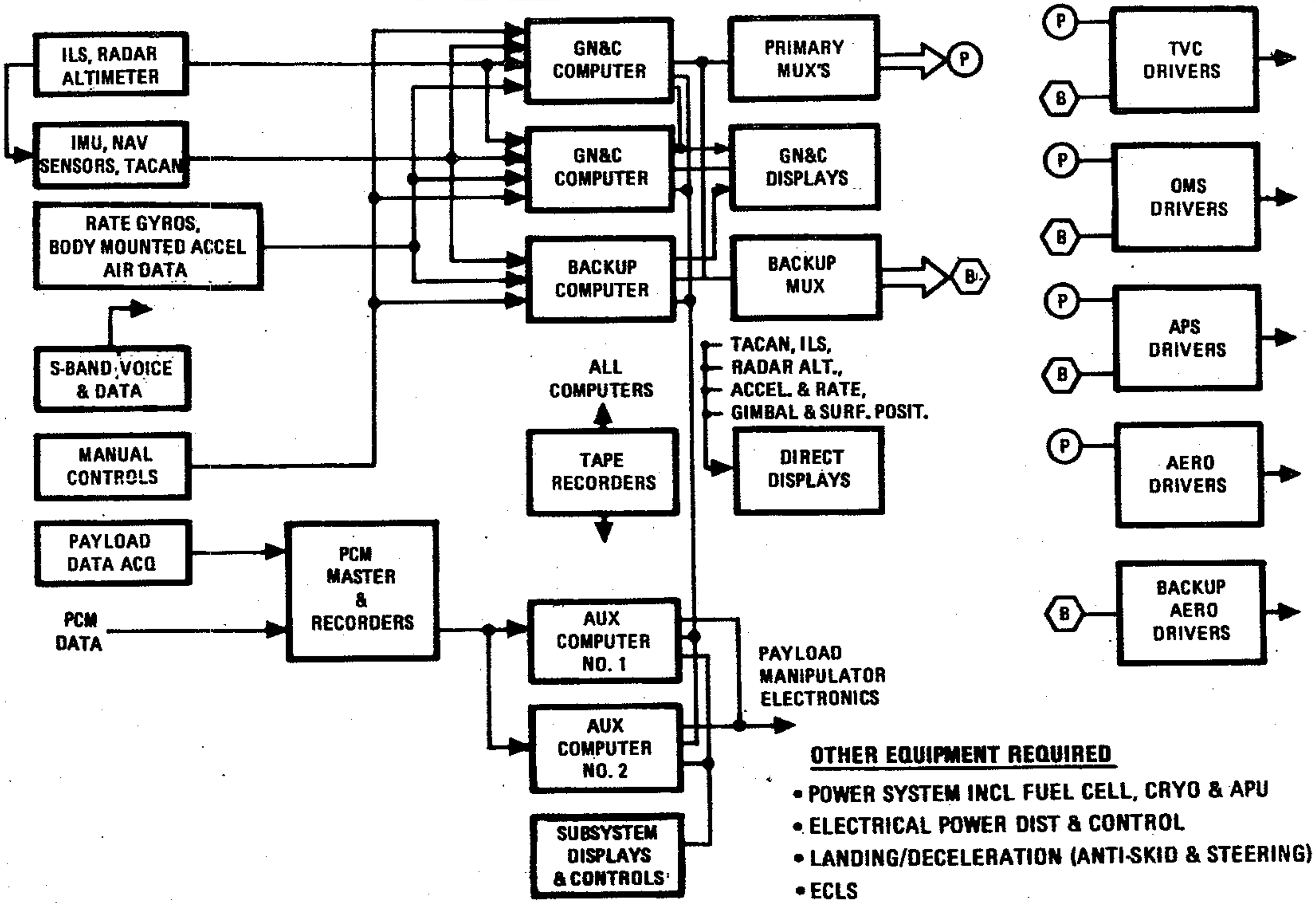

OTHER EQUIPMENT REQUIRED

- POWER SYSTEM INCL FUEL CELL, CRYO & APU
- ELECTRICAL POWER DIST & CONTROL
- LANDING/DECELERATION (ANTI-SKID & STEERING)
- ECLS
- GROUND COMMAND DECODERS

MECHANIZATION OF SINGLE STRING SAFE-RETURN SYSTEM

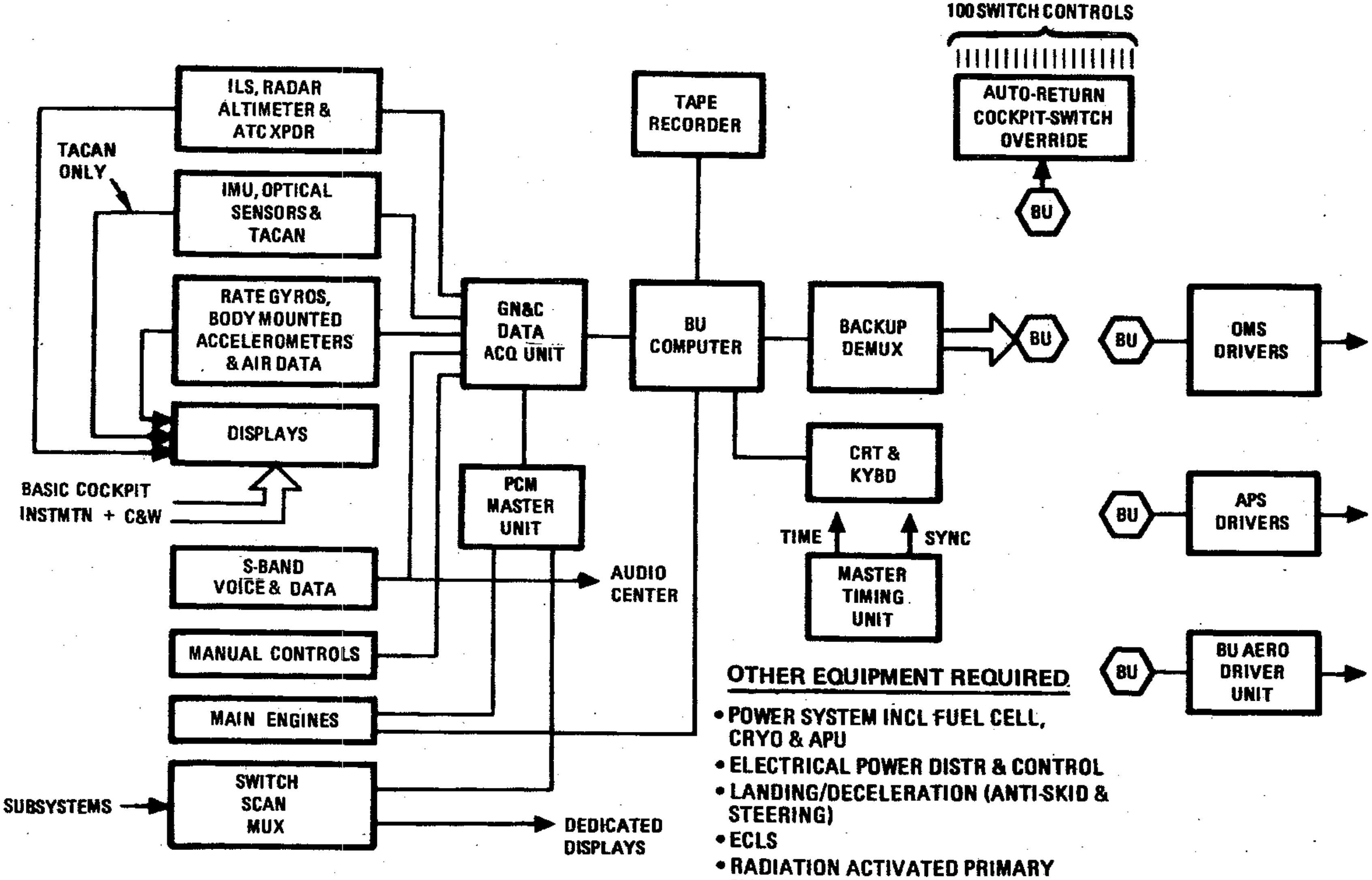

OTHER EQUIPMENT REQUIRED

- POWER SYSTEM INCL FUEL CELL, CRYO & APU
- ELECTRICAL POWER DISTR & CONTROL
- LANDING/DECELERATION (ANTI-SKID & STEERING)
- ECLS
- RADIATION ACTIVATED PRIMARY SYSTEM INHIBIT

AVIONICS BOXES EVALUATED

SUBSYSTEM	CONCURRENT PROGRAM	PHASED PROG		SAFE-RET	SINGLE STRING SAFE-RET
		IN-LINE	DEFER		
GUIDANCE, NAV & CONTROLS	15	8	7	13	12
COMM & TRACKING	34	2	32	20	13
DISPLAYS & CONTROLS	24	16	8	22	12
INSTRUMENTATION	16	4	12	11	7
DATA PROC & SOFTWARE	8	8	—	8	4
ELECT PWR DIST & CONTROLS	13	8	5	13	13
SKID/STEERING CONTROLS	2	—	2	2	2
FUEL CELL ELECTRONICS	1	1	—	1	1
APU ELECTRONICS	1	1	—	1	1
ECLSS CONTROLS	1	1	—	1	1
EXTERNAL TANK SEQ	1	—	1	1	1
PAYLOAD MGMT	2	—	2	—	—
TOTAL	118	49	69	93	67

AVIONICS HARDENING PROGRAM COST SUMMARY
($ IN THOUSANDS)
CASE 2

	1 EMP	2 TRANSIENT INDUCED FAILURE	3 BURN OUT	4 NEUTRON & ELECTRON DEGRADATION	5 LATCH-UP	6 RESIZE	TOTAL
DDT&E	3,274.9	24,017.8	3,790.6	3,010.9	878.7	174.2	35,147.1
PRODUCTION	948.1	7,045.0	-	-	552.0	90.7	8,635.8
OPERATIONS	604.4	6,084.3	-	-	351.9	1,885.3	8,925.9
TEST REQUIREMENT							
PIECE PARTS		1,182.8					1,182.8
UNITS		5,211.7					5,211.7
BOX		3,971.7					3,971.7
EMP	1,450.5						1,450.5
TOTAL	1,450.5	10,366.2					11,816.7
TOTAL	6,277.9	47,513.3	3,790.6	3,010.9	1,782.6	2,150.2	64,525.5

MAIN PROPULSION ENGINE SURVIVABILITY

QUESTION: WOULD RADIATION HAVE DETRIMENTAL AFFECT IF IT OCCURRED AFTER ENGINE SHUTDOWN?

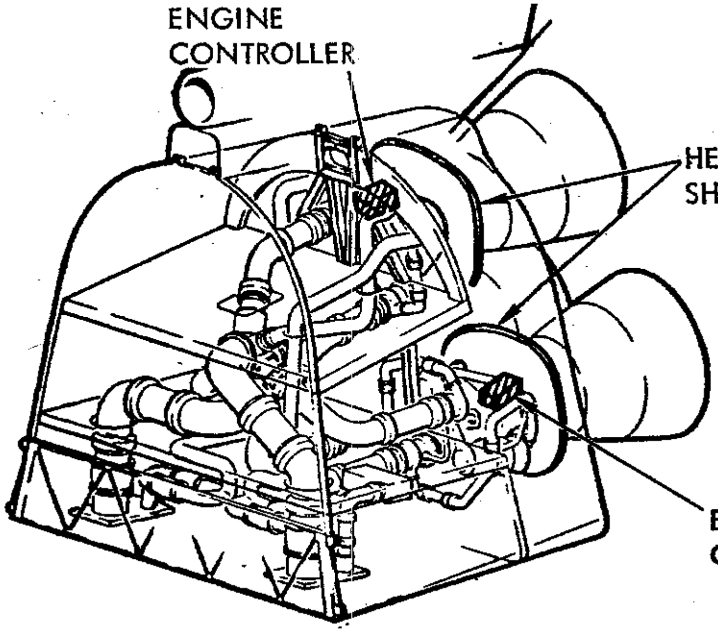

- NO PROMPT DOSE TRANSIENT OR BURNOUT PROBLEM (POWER OFF)
- EMP MAY CAUSE DAMAGE
- ELECTRON & NEUTRON RADIATION MAY CAUSE COMPONENT DEGRADATION
- CORRECTIVE ACTION COULD INCLUDE
  - SHIELDING, & COMPONENT SELECTION
  - INCREASED NON-SCHEDULED MAINTENANCE

ENGINE CONTROLLER - ONE PER ENGINE

- REDUNDANT COMPUTERS
- CONTROL

RECOMMENDATION - CONCUR WITH EARLIER ROCKETDYNE REPORT (70RC10232, 21 SEPT. 1970). ENGINE ELECTRONICS SURVIVABILITY STUDY REQUIRED.

COMMONALITY OF LIGHTNING & EMP PROTECTION

LIGHTNING	SCALE FACTOR	EMP
HIGH ENERGY PULSE (200K AMP) MEDIUM RISE TIME 1-10 μSEC	1000/1	LOW ENERGY PULSE (200 AMP) RAPID RISE TIME - NANOSECONDS
PROTECTION		PROTECTION
AIRFRAME-SKINS, STRUCTURE SHIELDS, 2.5 MILLIOHM JOINTS 0.080 IN. SKIN THICKNESS	5/1 HIGH COMMONALITY	SHIELDED BAYS, 2.5 MILLIOHM JOINTS, SELECTED CONNECTORS. 0.020 IN. SKIN THICKNESS
CABLE SHIELDS OUTSIDE OF AIRFRAME, CURRENT DIVERTERS ON RUN LIGHTS & ANTENNAS, DIELECTRIC PROTECTION	1/3 MEDIUM COMMONALITY	CABLE SHIELDS OUTSIDE OF SHIELDED BAYS, TROUGHS, RUN LIGHTS, ANTENNAS, DIELECTRIC PROTECTION
DESIGN EFFORT UNIQUE TEST & ANALYSIS UNIQUE	1/1 LOW COMMONALITY	DESIGN EFFORT UNIQUE TEST & ANALYSIS UNIQUE
HARDWARE - LARGE CAPACITY LOW RESISTANCE	5/1 HIGH COMMONALITY	HARDWARE - SMALL CAPACITY STANDARD SIZE LOW RESISTANCE

CONCLUSION

IF LIGHTNING & EMP PROTECTION ARE INTEGRATED & THE FORM OF PROTECTION MADE TO PROTECT/RESIST EITHER THREAT, IT IS ESTIMATED THAT A 20% SAVINGS WILL RESULT IN THE COMBINED TOTAL COST OF INCORPORATING EACH REQUIREMENT INDEPENDENTLY.

AVIONICS SURVIVABILITY IMPLEMENTATION PLAN (CONCURRENT)

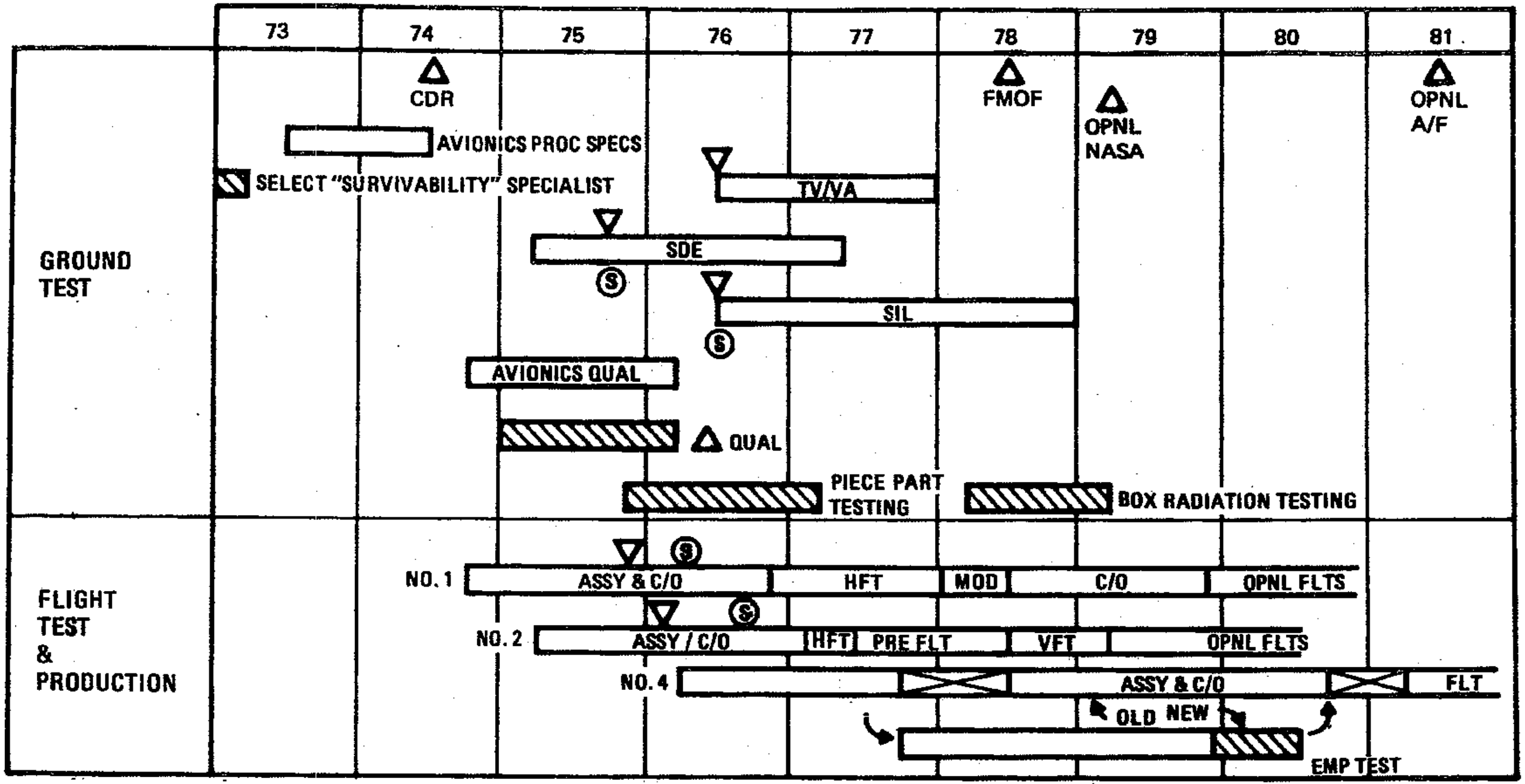

GROUND RULES

- DESIGN REL PER BASELINE PROGRAM
- NO IMPACT ON FMOF
- SUPPORTS AF OPERATIONAL CERT BY MID-81

PROGRAM IMPACT

- DECREASED USE OF O.T.S. HDW - INCREASE DESIGN & QUAL
- INCREASED TEST PROG - PIECE PART, BOX RADIATION, EMP TEST, SIL, SDE

LEGEND

- (hatched bar) – △ EFFORT
- ▽ – 1ST HARDWARE
- Ⓢ – 1ST SOFTWARE